EN

PNR/PNE 73-83-104-124 - PNR 142SL

ORIGINAL INSTRUCTIONS



INSTALLATION, USE AND MAINTENANCE MANUAL

jurop

COMPANY WITH QUALITY SYSTEM CERTIFIED BY DNV ISO 9001

COMPANY WITH ENVIRONMENTAL SYSTEM CERTIFIED BY DNV ISO 14001

Rev. 05
06-03-2023

2023 – **Jurop** – Azzano Decimo (PN)

Reproduction, electronic storage and dissemination, even partial, are prohibited.
Jurop reserves the right to modify the products described in this manual without prior notice.
Any product names mentioned herein are the trademarks of their respective owners.

Contents

1.	**General warnings**	pag.	4
1.1	Introduction		4
1.2	Spare part request		4
1.3	Warranty terms and conditions		4
2.	**Technical data**	pag.	5
2.1	Dimensions and arrangements		5
2.2	Performances		6
2.3	Usage limitations		7
2.4	Sound pressure level		7
2.5	Lubrication		7
3.	**Safety and accident prevention**	pag.	8
3.1	General recommendations		8
3.2	Intended use		8
3.3	Conveyed fluids		8
4.	**Installation**	pag.	9
4.1	Compulsory accessories		9
4.2	Checking upon receipt		9
4.3	Storing in the warehouse		9
4.4	Handling and installation		9
4.5	Mounting		10
4.6	Vacuum – Pressure Line		10
4.7	Overheating alarm (optional)		11
4.8	Vacuum-pressure inverter: Remote control actuators		11
4.9	Pump mounting – Drive connection		12
5.	**Start up**	pag.	14
5.1	Pump starting-up		14
5.2	Precautions when starting the system		14
6.	**Maintenance**	pag.	16
6.1	Ordinary maintenance		16
6.2	Extraordinary maintenance		17
7.	**Malfunctions: troubleshooting**	pag.	20
8.	**Scarapping**	pag.	20
9.	**Accessories**	pag.	21

SPARE PART DATA SHEET – PNR-E 73-83 DIRECT TRANSMISSION	22
SPARE PART DATA SHEET – PNR-E 73-83 WITH GEARBOX	24
SPARE PART DATA SHEET – PNR-E 104-124 DIRECT TRANSMISSION	26
SPARE PART DATA SHEET – PNR-E 104-124 WITH GEARBOX	28
SPARE PART DATA SHEET – PNR 142 DIRECT TRANSMISSION	30
SPARE PART DATA SHEET – PNR 142 WITH GEARBOX	32
SPARE PART DATA SHEET – PNR-E ACCESSORIES	34
SPARE PART DATA SHEET – PNR-E WITH HYDRAULIC MOTOR	36

1. General warnings

1.1. Introduction

• This booklet contains the necessary instructions for a correct installation, running, use and maintenance of the pump, as well as some practical suggestions for a safe operating.

• The knowledge of the following pages will grant a long and trouble-free operation of the pump.

• Following the instructions below contributes to limiting pump repair expenses by extending its duration, as well as preventing hazardous situations, thereby increasing its reliability.

• If the pump is driven by an hydraulic motor please refer to manufacturer's specific manual.

• It is recommended to:

– read, understand and apply carefully the instructions before running the pump;

– keep the booklet at hand and have it known to all operators.

• Below is a brief description of the symbols used in this manual.



If these safety rules are not respected, operators can be injured and the pump or oilers damaged remarkably.



If these safety rules are not respected, the pump or system can be damaged.



Suggestions for an environment friendly use of the pump.



Useful information for an easy usage and maintenance of the pump.

• The graphic representations and photographs contained in this manual are there to illustrate the product in the parts that make it up and in specific operating phases. Though the model shown in the manual may differ from the one purchased, the operating principle at the base of the illustrated operating phase is the same.

• Every PNR/PNE pump has to be fitted with its own tag reporting the following data: Model, Serial number, Year, Max speed, Max pressure.

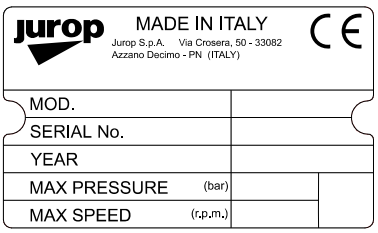

Pic. 1.1

1.2. Spare part request

• Use only **genuine spare parts** for maintenance and repairs. To order spare parts, provide the following details:

EXAMPLE:

a) The model of the pump (see pump tag)	PNR 104
b) The serial number of the pump (see pump tag)	K90001
c) A description of the parts (see parts list)	VANE
d) The quantity (see parts list)	n°5 pz
e) The code number of the part (see parts list)	16016 059 00

1.3. Warranty terms and conditions

• Compliance with the installation, use and maintenance instructions provided by this manual **is crucial for the recognition of warranty** against defective parts.

2. Technical data

• Vane vacuum pump and blower.

• The PNR version defers from the PNE for the injection air cooling instead of the natural air cooling. The controlled injection of air grants efficient cooling also when the pump is used for heavy duty (patented system).

• The model 142 is not available in the PNE version.

STANDARD EQUIPMENT

• Direct transmission with smooth or splined shaft (ASAE 1 3/8").

• Gearbox transmission with splined shaft (540-1000 rpm).

• Counter clockwise rotation.

• Five heat-resistant para-aramid synthetic fiber vanes. The tangential vane design reduces the wear due to friction and assures greater machine life.

• Automatic lubrication by means of a volumetric pump and a rear oil tank or side oil tank (PNR 142 only). Copper oil piping.

• Asymmetrical manifold with check valve installed on the pump inlet.

AVAILABLE ON REQUEST

• Clockwise rotation.

• Transmission with hydraulic motor.

• Drive by means of mechanical drive from Power Take Off.

• Pulley for the belt drive.

• The built-in vacuum-pressure changeover valve is available with pneumatic or hydraulic actuator.

• Pivoting connection in aluminum alloy. Available in different diameters.

• Safety thermostat.

2.1. Dimensions and arrangements

PNR/PNE direct transmission

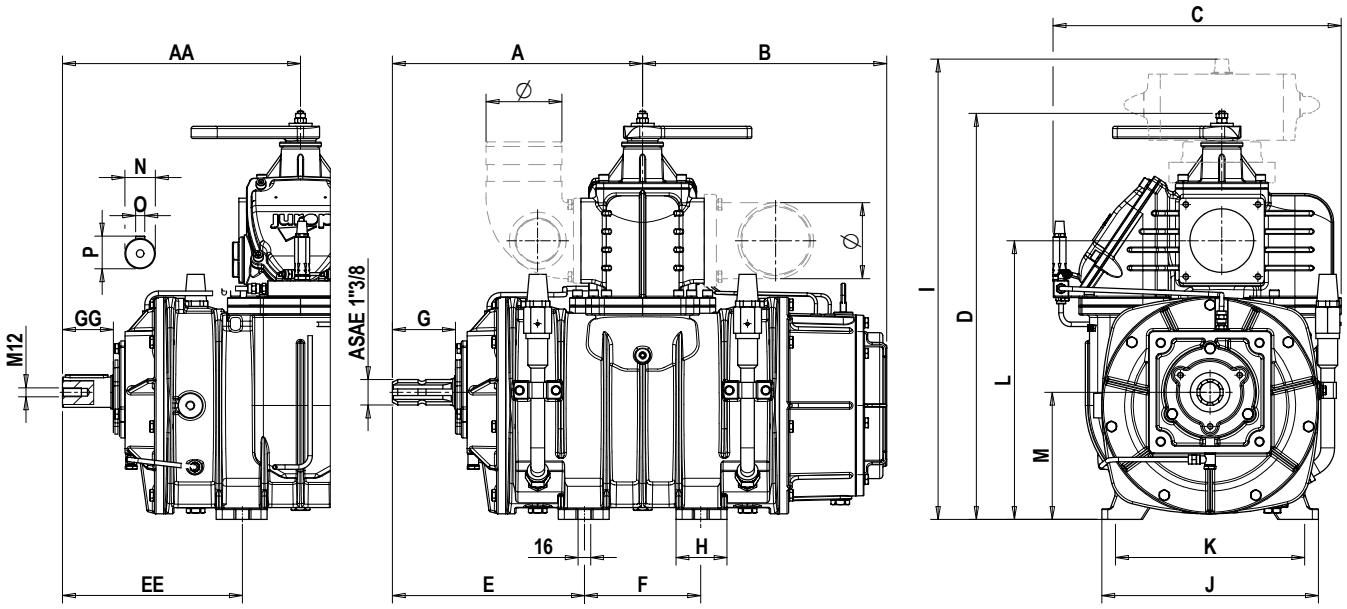

PNR/E	A	AA	B	C	D	E	EE	F	G	GG	H	I	J	K	L	M	N	O	P
73	309	284	295	396	496	232	207	153	83	60	65	567,5	270	230	339	147	35	10	38
83	331	306	317,5	396	496	253	230	153	83	60	65	567,5	270	230	339	147	35	10	38
104	329	313	321	380	534,5	253	237	153	83	67	67	606	285	249	367	167,5	40	12	43
124	362	346	353,5	380	534,5	285	269	153	83	67	67	606	285	249	367	167,5	40	12	43
142	355	338	344	423	578	205	188	300	83	67	95	646	320	270	407	190	40	12	43

Ø	ADJUSTABLE			FIXED WITH VALVE-SEAT			
PNR/E	Ø76	Ø80	Ø100	Ø60	Ø76	Ø80	Ø100
73	•			•	•	•	
83	•			•	•	•	
104	•	•	•		•	•	•
124	•	•	•		•	•	•
142		•	•			•	•

PNR/PNE with hydraulic motor / with gearbox drive

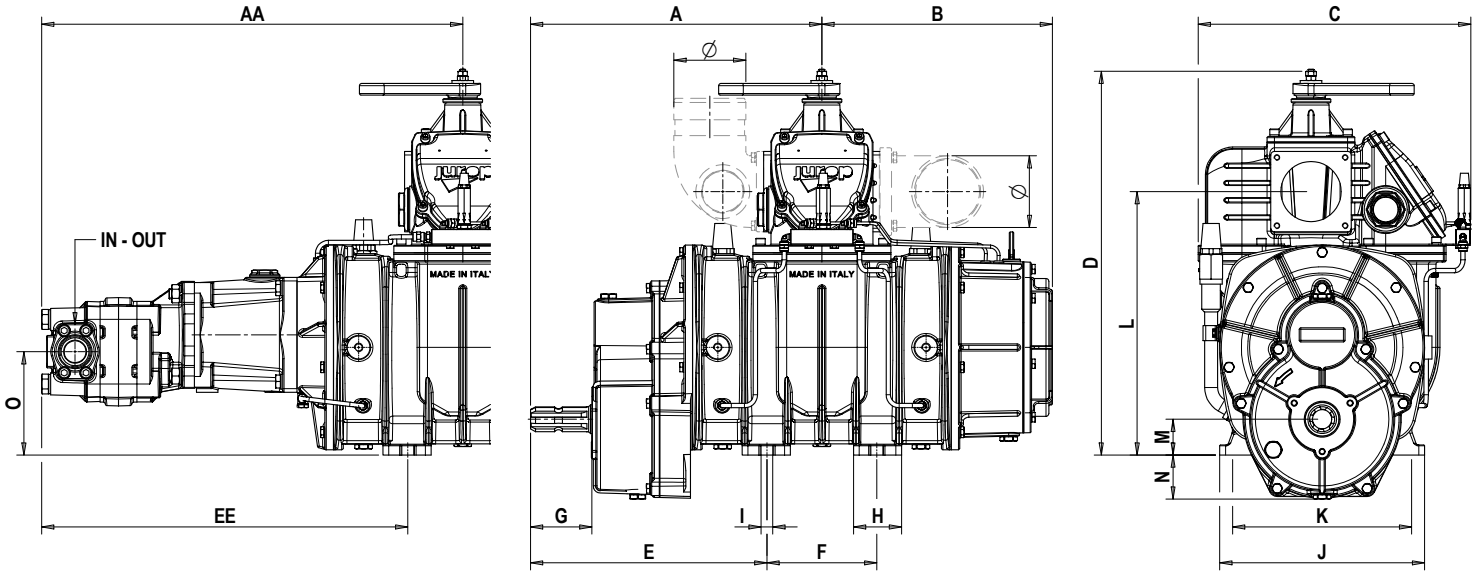

PNR/E	A	AA	B	C	D	E	EE	F	G	H	I	J	K	L	M	N	O	IN	OUT
73	372	548,5	295	396	496	296	472	153	84	65	16	270	230	339	45	62	124	1”	1” ¼
83	395	571	317,5	396	496	318	492	153	84	65	16	270	230	339	45	62	124	1”	1” ¼
104	406	586	321	380	534,5	329	510	153	85,5	67	16,5	285	249	367	50	62	144	1” ¼	1” ½
124	437	602	353,5	380	534,5	368	525	153	85,5	67	16,5	285	249	367	50	62	136	-	-
142	434	597	344	423	578	284	447	300	85	95	16	320	270	407	73	50	159	1”	1” ¼

Ø : see previous page for values

2.2. Performances

Performances			PNR/PNE 73	PNR/PNE 83	PNR/PNE 104	PNR/PNE 124	PNR 142
Maximum speed	PNR-E D	rpm	1350	1350	1300	1300	1200
	PNR-E M	rpm	540	540	540 - 1000	540 - 1000	540 - 1000
	PNR-E HYD	rpm	1350	1350	1300	1300	1200
Air flow at free air condition		**l/min**	**7200**	**8200**	**10400**	**12400**	**14200**
		m³/h	432	492	624	744	852
Air flow at 60% vacuum rate		**l/min**	**6600**	**7600**	**9400**	**11200**	**12800**
		m³/h	396	456	564	672	768
Maximum vacuum		%	93	93	95	95	95
Maximum vacuum at continuos duty PNR		%	70	70	70	70	70
Maximum vacuum at continuos duty PNE		%	60	60	60	60	-
Power required at free port		kW	6,5	7,5	9	11	14
Power required at maximum vacuum		kW	9,5	10,5	12,5	14,5	17
Power required at 0,5 bar rel (1,5 bar abs)		kW	11	12,5	14	16	20,5
Power required at 1 bar rel (2 bar abs)		kW	13	14,5	18,5	21,5	27,5
Max operating rel. press. (abs.) continuos duty		bar	1 (2)	1 (2)	1 (2)	1 (2)	1 (2)
Max operating rel. pressure (abs.)		bar	1 (2)	1 (2)	1,5 (2,5)	1,5 (2,5)	1,5 (2,5)
Oil consumption		g/h	110-130	110-130	130-150	130-150	160-170
Oil tank capacity		l	2,2	2,2	3,2	3,2	4
Weight	PNR-E D	kg	110	119	150	170	210
	PNR-E M 540	kg	121	128	173	190	225
	PNR-E M 1000	kg	-	-	173	190	225
	PNR-E HYD	kg	141	155	185	200	230

REFERENCE CONDITIONS	
Conveyed gas: air	Vacuum condition: atmospheric discharge
Ambient reference temperature: 20°C (68°F)	Pressure condition: atmospheric suction
Absolute reference pressure: 1013mbar (14.7psi)	Actual performance may vary of ± 5%

2.3. Usage limitations

Model	Max. speed			P (bar ABS)	T (°C)		Room Temperature
	Direct - HYD	Gearbox - 540	Gearbox - 1000		PNR	PNE	
PNR / PNE 73	850 - 1350	360 - 540	-	2,5 bar abs	180 °C	160 °C	-20 / +40°C
PNR / PNE 83	850 - 1350	360 - 540	-	2,5 bar abs	180 °C	160 °C	-20 / +40°C
PNR / PNE 104	850 - 1300	360 - 540	650 - 1000	2,5 bar abs	180 °C	160 °C	-20 / +40°C
PNR / PNE 124	850 - 1300	360 - 540	650 - 1000	2,5 bar abs	180 °C	160 °C	-20 / +40°C
PNR 142	850 - 1300	360 - 540	650 - 1000	2,5 bar abs	180 °C	160 °C	-20 / +40°C

P: absolute pressure during delivery T: temperature during delivery

2.4. Sound pressure level

		Lw (A)								
Noise power of the only pump, without drive trasmission suction group, mufflers.		[dB(A)]								
RPM	VACUUM/PRESSURE	PNE 73	PNR 73	PNE 83	PNR 83	PNE 104	PNR 124	PNE 124	PNR 124	PNR 142
NOMINAL SPEED	vac 80%	90	92	90	92	90	93	90	93	94
	Δ press 0,6 bar	103	103	103	103	104	104	104	104	105

2.5. Lubrication

- To operate correctly, the machine must be lubricated/greased regularly, using the recommended products listed in the tables below.
- Products are recommended according to working temperature and are in compliance with normative:
  - ISO VG: industrial sector lubricants (recommended);
  - SAE: Automotive sector lubricants (equivalent)
- Carry out the operations above following the instructions provided in this manual.
- Recommended lubricant for the OIL TANK:

T°	Viscosity	Type	ENI	ESSO	SHELL	TOTAL	MOBIL	BP	TEXACO HAVOLINE	Q8
< 10°C	ISO VG 46	mineral oil	Acer 46	Nuto 46	Morlina S2 B 46	Drosera MS 46	Nuto H 46	Bartran HV 46	Rando HD 46	Schubert 46
> 10°C	ISO VG 150	mineral oil	Acer 150	Nuto 150	Morlina S2 B 150	Drosera MS 150	Nuto H 150	Bartran HV 150	Rando HD 150	Schubert 150

- Recommended oils and greases for the GEARBOX:

Viscosity	Type	ENI	ESSO	SHELL	TOTAL	MOBIL	BP	TEXACO HAVOLINE	Q8
ISO VG 220	mineral oil	Blasia 220	Spartan EP 220	Omala S2 GX 220	Carter EP 220	Mobilgear 630	Energol GR XP 220	Meropa 220	Goya 220

- Recommended grease (range temperature: from -20°C to +40°C): lithium grease NLGI 2.

3. Safety and accident prevention

Attention: carefully apply these prescriptions.

3.1. General recommendations

• When transporting the compressor use proper slinging. Store the compressor in stable places.

• Installation and maintenance must be carried out with the unit totally disengaged from its drive system and must be performed by qualified personnel.

• Use adequate clothing (avoid ties, loose sleeves, necklaces and so on) and suitable protection equipment (gloves, protection glasses, boots...).

• Before each maintenance operation, stop the pump and restore the atmospheric pressure.

• Make sure that all the parts of the unit are idle and cool, before performing any maintenance operation.

• To prevent errors and hazardous situations, establish what each operator is responsible for in the different maintenance operations.

• Do not start the machine if the protection devices provided for transmissions are removed. Replace damaged part.

• Final manufacturer must make the transmission inaccessible by means of a fixed guard or interlocked movable guard.

• Operators working nearby must avoid prolonged exposure to the noise emitted by the aspirator, if not equipped with the proper ear-protection devices (IPDs recommended: ear protectors).

• When the pump is running, some parts may reach very high temperatures (above 70°C). Use all necessary precautions to avoid contact.

• Avoid accidental suction of solids: solids may be projected at high speed through the exhaust manifold and cause injures. A filter must be mounted on the suction line (Mesh 55).

• Pressure relief valve: point the air flux away from the operators.

• Do not use the aspirator over its designed limits: the machine may be damage and the operator may be injured.

Do not exceed the speed and the power supply parameters indicated in the technical tables (see par. 2.2 - 2.3).

• Based on the final use of the decompressor, the insertion in the housing machine and the typology of the same, the designer of the housing machine must apply safety signals (pictograms) to warn the operator on the risk still present. These pictograms essentially refer to three categories:

- signals prescribing the use of Individual Protection Devices (IPDs) such as, in this case, the use of gloves and ear protectors;
- signals indicating to pay particular attention to the dangers related to the machine's components, such as: risk of dragging in the transmission equipment and contact with hot surfaces;
- signals indicating specific parts of the machine for an easier identification, such as: greasing points, oil tanks, etc.

3.2. Intended use

• Vacuum pumps of the PNR/PNE series are commonly used on stationary or mobile equipment for suction and transfer by means of vacuum or socalled pneumatic-transportation of liquid and solid wastes. Any other usage shall beconsidered improper.

• They are air-cooled and consequentely foreseen for a non-continuous duty. The mod. PNE and the mod. PNR, the latter supplied with air injection system (fig. 1) and meant for heavy duty works, do not accept operating temperatures over 150 °C (300 °F), checked at not more than 150 mm from the discharge connections.

• Do not sack toxic substances and inflammable or explosive gasses, since the internal components of the pump may reach high temperatures.

Avoid suction of toxic (poisonous) explosive or flammable gasses because internal components may reach high temperatures.

• Avoid suction of liquids or solids, they can seriously damage the pump.

Attention: liquids or solids infiltrations can seriously damage the pump.

• Do not run the pump over its designed operating limits (see par. 2.3): it may break and transmission can be damaged.

3.3. Conveyed fluids

• PNR/PNE are suitable for conveying filtered air. Before conveying other kind of gases, verify compatibility with pump's characteristics.

• The machine was not designed and built to operate in environments with potentially explosive atmosphere (outdoor or indoor).

• Please contact JUROP's Technical dept. if necessary.

4. Installation

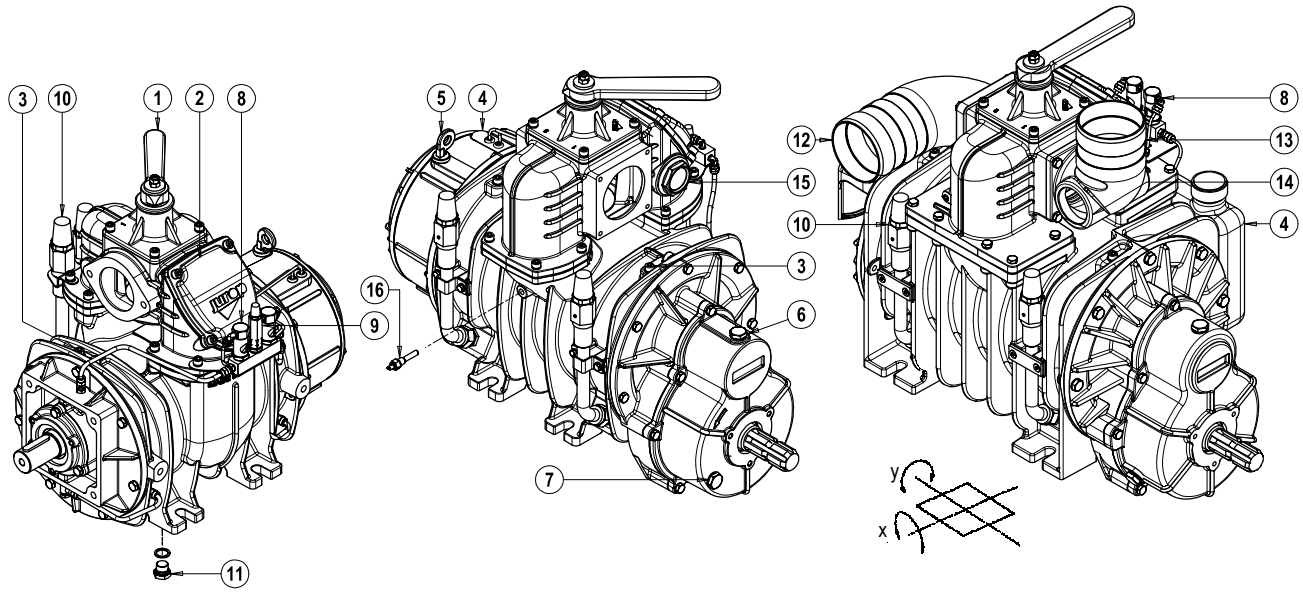

Pic. 4.1

1.	Vacuum/Pressure change-over valve
2.	Non-returne valve (Intake manifold)
3.	Vanes inspection port
4.	Oil tank
5.	Oil filling port and dip stick
6.	Gear box oil filling plug
7.	Gear box oil level plug
8.	Drip oilers
9.	One way valve
10.	Air injection valves (PNR)
11.	Drainage hole
12.	Exhaust conveyor
13.	Suction conveyor
14.	Pressure relief valve port. *Available only if foreseen with additional conveyor Code1627102500*
15.	Vacuum control valve set up
16.	Safety thermostat (optional)

4.1. Compulsory accessories

• Compulsory accessories for a correct running of the pump:
– safety filter mounted between the pump and the secondary shutoff;
– over-pressure safety relief valve.

4.2. Checking upon receipt

• When the goods are delivered, make sure that all parts listed on the delivery note are in perfect condition and have suffered no damage during shipping.

• Remove the parts of the packaging that can be dangerous if sucked by the compressor.

• Make sure the vacuum pump has its identification plate.

Pumps without such identification are to be considered anonymous and potentially dangerous: in such an event, they must not be used, otherwise the manufacturer will be deemed free from any liability whatsoever.

4.3. Storing in the warehouse

• If the compressor will not be installed inside a short time after delivery:
– remove the guards from the ports and spray a film of protective oil over the inner surfaces of the body, rotors and sides. Then attach again the guards;
– store in a closed and dry place. Renew the preserving oil periodically.
• To temporarily store a used pump, follow the instructions below:
– thoroughly clean the pump.
– equip the pump with suitable anti-corrosion protection.

4.4. Handling and installation

• Before each movement, verify that the lifting equipment has a suitable capacity (check the weight of the decompressor, possibly showed in this manual, in the paragraph 2.1).

• Do not lift the packaging or the machine when moving more than 50 cm from the ground. Proceed with the final lifting only near the installation point.

• Harness the machine with suitable straps / chains near the main body, paying attention to the position of the mass centre of gravity to ensure the load stability.



Warning: do not stand under the machine when it is lifted during the installation.

4.5. Mounting

• The pump must be assembled for an easy access for maintenance operations and secured rigidly to a frame or levelled base (max. 3° slant to the horizontal plane. See Fig. 4.1). The base must be such as to avoid vibrations, bending or deformation.

• It is recommended to install the pump on vibration adsorbing pads to reduce the noise and vibrations produced during its operation.

• Leave enough space around the pump to allow the free circulation of air for cooling; avoid exposure to dirt and debris.

• Provide the necessary space to reach all points of lubrication control (oil level), and the oil tank filler cap, the lever of the 4-way switch, vanes inspection ports. See Pic. 4.1.

• For PNR/PNE 73-83-104-124 the oil tank is mounted on the rear side of the pump. Instead for PNR142 the oil tank is mounted on the suction side of the housing.

• Provide for suitable manoeuvring spaces of the inverter lever. The control lever has two possible switching positions well defined by the latches and numbers reported on the fusion. It is directly connected to the internal diverter tang of the inverter, making it very intuitive: 90° of the lever switching corresponds to 90° of the inverter switching.

• Based on the functionality of the system which will house the decompressor, the designer of the end machine, must:

– Properly signal the functionality of the inverter according to the position of the manual operating lever or of the pneumatic actuator or of the hydraulic one.

– Install suitable pressure and / or vacuum restrainer valves near the inlet and outlet points of the machine.

• In case of PNR/PNE with hydraulic motor, provide the necessary space to disassemble the motor itself and proceed with joint lubrication.

• In the event that the decompressor is electrically isolated, connect it to the ground or make it equipotential with the housing machine. Check that the paint does not prevent its passage.

• The machine expels gas during delivery at temperatures that can reach the maximum permitted values for operation, with its lubricating oil in suspension. Oil consumption is stated in paragraph 2.2, the quantity of consumed oil corresponds to the quantity of oil emitted at delivery.

4.6. Vacuum / Pressure line

• See the following picture.

• The hoses connecting the suction and exhaust ports of the vacuum pump must be of adeguate diameter (suggested not less than 3") and of oil and corrosion resistant materials and before connecting them, make sure that they are perfectly clean in the inside.

• The weight or dimensions of the pipes must in no way stress the PNR/PNE body. Use high temperature resistant rubber sleeves.

• Remove the port guards when mounting. The pipes and components of the whole line must be clean.

• Avoid constrictions and tight curves where they are not essential.

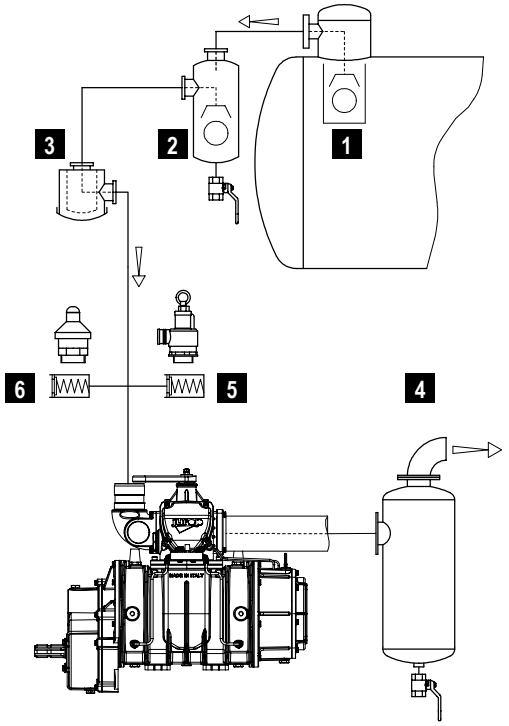

Pic. 4.2

1.	Primary shutoff
2.	Secondary shutoff
3.	Suction filter
4.	Silencer / Oil separators
5.	Over-pressure safety relief valve
6.	Vacuum control valve

• Connect the pump to the tank through the suction manifold which has a threaded port for fitting the over-pressure valve.

• The exhaust pipes can reach high temperatures. Protect those adequately from the operator reach.

• A clapet valve on suction pipe avoids rotation in the opposite direction when the pump stops.

• To avoid that foreign liquids will enter the vacuum pump it is necessary to mount on the suction line an over-flow valve of "floating-ball" type (Fig. 4.2. - pos. 1). The flow section of this valve must be equivalent to the suction hose's one.

• It is also necessary to have on the line a suitable air filter for preventing solids to be sucked inside the vacuum pump. It is also recommended to mount a "secondary shutoff" of floating-ball type (Fig. 4.2 - pos. 2) between vacuum pump and over-flow (primary shutoff), along with the previously mentioned air filter (Fig. 4.2 - pos. 3).

• Called also 4-way valve, normally is manually operated but it can be at any time transformed in pneumatically or hydraulic operated upon request of the appropriate kit.

• During normal running of the pump the resulting noise should be reduced by means of a suitable silencer (Fig. 4.2 - pos. 4) mounted as close as possible to the pump itself. It has to be dimensioned for the air flow produced by the pump model. The oil used for the pump's inside lubrication has to be separated from the exhausted air by means of an adequate oil-separator, placed directly inside the silencer. The silencer is fitted also with a draining tap for the collected oil and condensed liquids.

Do not dispose of in the environment. Dispose of in compliance with the standards in force.

• Over-pressure safety relief valve (Pic. 4.2 - pos. 5). It must be dimensioned to discharge the entire air-flow of the pump. The adjustement of this valve has to be kept inside 10% of tollerance of the pump's working pressure and in any case, it has to stay inside the given value of the tank's work pressure.

• Vacuum control valve has to be fitted on the suction piping, if the tank's characteristics or the vacuum line will need this kind of vacuum-limiting device (pic. 4.1 – pos. 15).

• For pumps that reach, during normal operating, discharge air temperature close to 160-180 °C (320-360°F) - (checked at not more than 150 mm from the discharge connection) it is necessary to use a device (overheating limiter) that will not allow to exceed such temperature. Contact our Technical Department.

• An adjustable curved pipe is installed on the outlet of the silencer, in order to prevent rain from entering and to enable positioning (during installation) of the output airflow.

• An oil-separator must be installed in correspondence of the discharge line of PNR/E. Besides reducing the noise produced by the air flow along the vacuum line, the silencer also traps the oil vapour at the outlet due to decompressor lubrication.

Attention: an oil-separator must be installed in correspondence of the discharge line.

4.7. Overheating alarm (optional)

• The vacuum pump can be equipped at the request of thermostat sensor. (See Fig. 4.1).

• Overheating alarm is strongly recommended in the following cases:

– operations close to the use limits;
– under pressure operations;
– not well defined or monitored operation conditions.

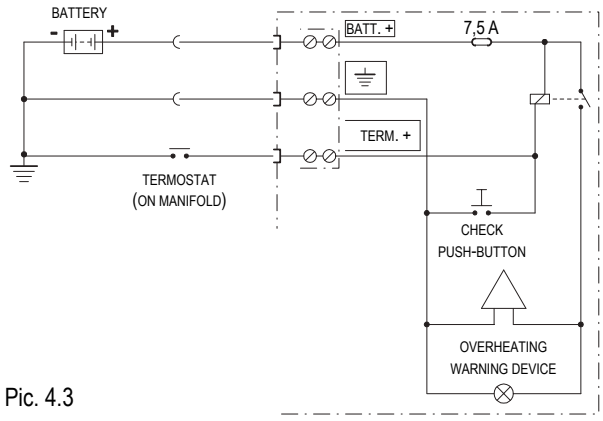

Pic. 4.3

• The alarm (available upon request) is composed of a blinking light and a warning buzzer that have to be connected to the thermostat (sensor). It is available at 12V or 24V.

• Consider the thermostat characteristics (See pic. 4.3).

– voltage from 6V to 24V with CC, from 6V to 12V with AC;
– maximum power: 3W.

• When threshold temperature is reached the alarm system is enabled and a gate valve (along vacuum line) is opened.

• It has to be mounted in a protected position in order to keep it free from water and other damaging media. Prepare the necessary connections for the electrical feeding.

• If the box supplied as an accessory is not used, make a check circuit as illustrated in Fig. 4.3.

• Overheating can seize the vacuum pump, causing a damage also in the drive line. Stop the pump for cooling or drive it at free ports conditions (with the suction valves fully opened) to let it cool down properly. The pump can be again operated only when the alarm is turned off after cooling.

• Check the muffler cleanliness. Obstructions may cause overheating.

Attention: overheating can seize the vacuum pump, causing a damage also in the drive line.

4.8. Vacuum-pressure inverter: remote control actuators

• A specific design of the vacuum-pressure diverter available on request enables the application of a pneumatic or hydraulic angular actuator (90°).

• See the exploded view at the end of the manual for spare parts.

	Pneumatic actuator	Hydraulic actuator
Fluid	Filtered, dried compressed air	Hydraulic oil ISO-L-HM
Filtration	ISO 8573-1 classe 4 (15 micron)	ISO 4406 21/19/16
Temperature	-20 ÷ +80 °C	-20 ÷ +80 °C
Rated pressure	5.6 bar	150 bar
Maximum pressure	8.4 bar	200 bar
Supply holes	G 1/4	G 1/8

Hydraulic actuator installation

• Adjust movement speed using the two built-in valves.
• Use a closed-center distributor or apply a block valve.

Pneumatic actuator installation

• Adjust movement speed by applying two unidirectional flow control valves.

For both actuators

• Adjust speed: full rotation should not take less than 1 second.

• Fluid filtration: ensure a level equal to or greater than the recommended value.

• In the event of a (hydraulic or pneumatic) supply failure, the suction unit inverter will remain in the same position it was when the failure occurred.

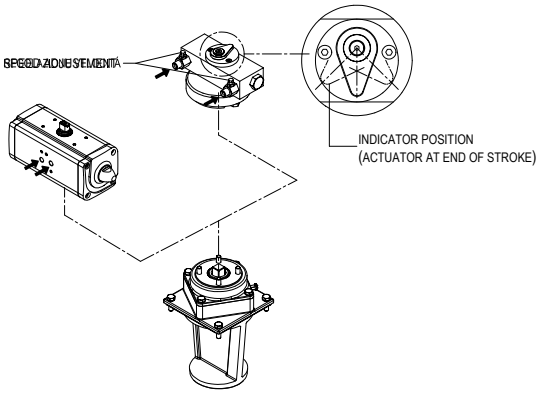

Pic. 4.4

Maintenance

• The diverter is adjusted before shipment and does not usually require further adjustments.

• Diverter lubrication:

– Use Lithium grease NLGI 2. Quantity: 80-100 g every 1000 working cycles.

– Do not grease using excessive amounts of grease.

• Hydraulic actuator: the control valves are equipped with an internal metal filter. Disassemble and clean if movement stops.

• Pneumatic actuator: for non-dried air, use temperature 0 ÷ +80°C.

• The following figure shows a possible schematic view of a correct hydraulic connection.

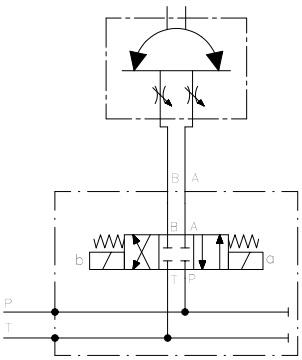

• The following figure shows a possible schematic view of a pneumatic connection.

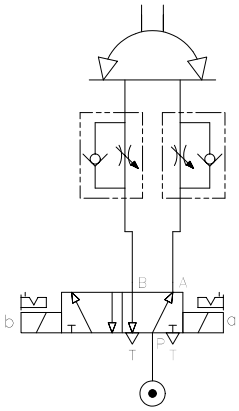

• In case of interruption of the pneumatic or hydraulic supply, the inverter of the suction unit remains in the same position it was when the failure occurred.

4.9. Pump mounting - drive connection

• For the machines of this series, the allowed power transmissions are:

– direct transmission (e.g.: from agricultural cardan shaft);

– oil hydraulic transmission (HYD).

• Protect with a fixed or interlocked guard and signal with pictograms the power transmission chosen and applied by the final installer, if there is the possibility that the operator will come into contact during handling.

A) Cardan shaft drive

• Use telescopic cardan shafts.

• In order to achieve a uniform motion of the driven shaft, the following requirements must be met (see Pic. 4.5):

– equal working angle α and α1 of both couplings;

– the internal fork joints must be coplanar;

– both driven and driving shafts must be coplanar.

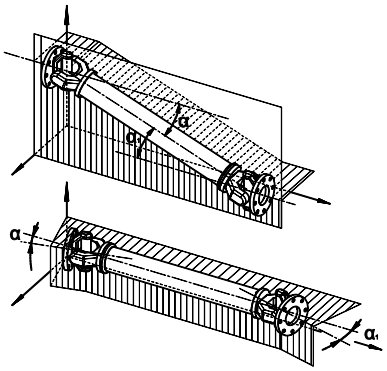

Pic. 4.5

• It is also recommended working with limited articulated joint angles (max 15°) and disengaging the transmission for those operations requiring great angles (steering or lifting).

Follow the rotation direction as indicated on the pump front conveyor protection. Follow the instructions of the cardan shaft's manufacture.

• Use the cardan guard supplied with the pump, by fixing it to the pump itself.

Use the cardan guard supplied with the pump, by fixing it to the pump itself. In any case, the installation, by the final installer, must comply with the current EC accident prevention regulations and must be compatible with the geometry of the protection cap supplied with the machine.

• The protection must not be removed; in case of removal, it is the responsibility of the final installer to provide for suitable guards according to the assembly.

• It is the responsibility of the final installer to provide for suitable guards, in presence of transmission shafts exposed during normal operation.

B) Belt drive

• Install a suitable pulley on the smooth shaft as close as possible to the pump in order to avoid excessive bending stress on the drive shaft.

• Apply an adequate belt tension (see list below).

• Do not use driven or driving pulleys with a pitch diameter inferior to values reported in the box below. Small pulleys require a high belt tension which may cause premature wear to the bearing or transmission damages.

• A limited speed ratio will extend the belts life and reduce stress on the shafts. When possible, prefer:

– pulleys with a pitch diameter bigger than the one indicated;
– engines or power take-offs with a speed similar to the one of the vacuum pump.

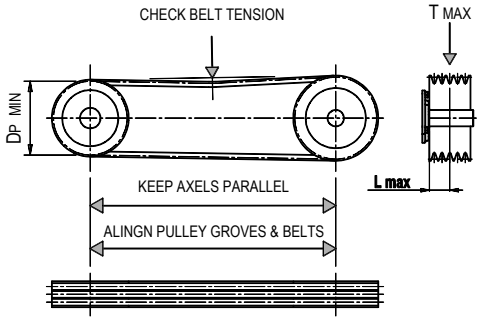

Pic. 4.6

PNR-E	73-83	104-124	142
Max. Speed (rpm)	1350	1300	1300
T. max (N)	2200	3300	3300
L. max (mm)	25	35	35
Min. pitch diameter (mm) [1]	200	200	200
Nr. Grooves	2	3	3
Belts type	XPB	XPB	XPB

[1] Pitch Diameter. min.: Minimum drive of pulley pitch diameter.

C) Hydraulic drive transmission

PNR-E	73	83	104	124	142
Displacement (cc/rev)	44	44	61	72	86
Pressure max vacuum (bar)	140	160	130	130	150
Pressure 1 bar rel (bar)	170	210	170	170	200
Speed max speed (l/min)	62	62	83	98	110
Max pressure draining line (bar)	5	5	5	5	5
Pressure motor exhaust (bar)	5	5	5	5	5
Max pressure motor (bar)	220	220	180	220	220

• **Fluid**: mineral oil for hydraulic systems in compliance with ISO/DIN.

Temperature	Optimum viscosity ale	Max. viscosity allowed
-20 / +80 °C	12 – 100 cSt	750 cSt

• **Filtration**: class 21/19/16 contamination according to ISO 4406 to be obtained with a ßx = 75 filter.

• **Check circuit connections**: they must be applied in the same rotation direction as that indicated by the arrow on the pump front flange.

• **Draining**: connect directly to the tank above the maximum oil level. Operating without draining line may damage the motor.

• **Distributor**: open-centre distributor in central idle position (vacuum pump off). It must be equipped with an adjustable overpressure safety valve.

• **Motor pipeline**: outlet pipe must not be of a smaller diameter than that of the inlet port. Inlet pipes always have a diameter smaller than outlet pipes. Choose preferably flexible pipes to avoid vibration transmission.

• **Tank**: with suction pipe and return separated by baffles. If necessary, use a heat exchanger to avoid oil heating above 70-80°C and protect it from extreme pressure with a pressure relief valve. Minimum approximate capacity: as twice as the circulation flow.

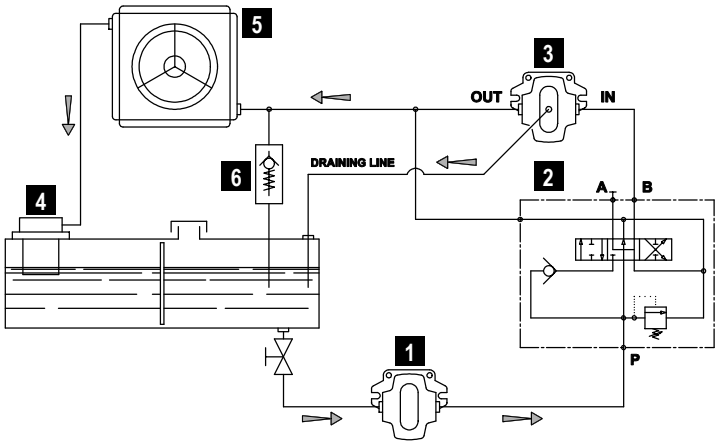

Pic. 4.7

1	HYD Pump	4	Oil filter
2	Distributor	5	Heat exchanger [2]
3	HYD Motor	6	Safety valve [2]

[2] optional components

• **Starting-up**: be sure that the system is well cleaned and pour oil into the tank and into the motor housing (necessary to lubricate the internal bearings).

• Vent the circuit and adjust the overpressure safety valve to the lowest possible value.

• Check the oil tank level.

• Increase pressure and rotation speed until operating values are reached.

• The machine/system manufacturer is responsible for dimensioning the lines.

The machine/system manufacturer is responsible for dimensioning the lines.

5. Start up

5.1. Pump starting-up

• Before starting the equipment check the lubricating oil level of the pump by means of the proper dip stick.
• Refill the tank with lubrication oil.
• Check the oil level in the gear box (if the pomp is provided with it).
• In order to choose the most suitable oil, see paragraph. 2.5.
• Check that all protection and safety devices are correctly installed.
• Check that no obstacles obstruct the vacuum and pressure line or the air injection cooling system.
• Check rotation direction: open all system valves and start running at slow speed.

Do not rotate in the wrong direction: pump may be damaged.

• Check which position of the 4-way integrated valve lever allows vacuum or pressure functioning.
• Close the valve and increase vacuum rate (or operating pressure).
• Check loading and operating speed for vibrations or unusual noises.

This vacuum pump is designed to work at maximum speed. For longer operating we recommend the pump be run at working speed.

• Prepare adequately transmission.

5.2. Operating precautions

• Run the vacuum pump at a room temperature of -20°C e +40°C.
• Do not make the vacuum pump overheat. Maximum air temperature on exhaust (or delivery) side: 160-180°C.
• Do not operate the pump without lubrication: it may cause quick wear and possible breakdown of vanes.
• Do not start running the pump under load: that causes stress to the drive system and the hydraulic motor.
• Check rotation speed. The vacuum pump must never exceed the maximum speed or run below the minimum speed.
• Do not accidentally operate the pump in the wrong direction: it may break the vanes.
• Do not convey the exceeding delivery outlet towards the suction port, otherwise it will sack warm gas.
• Control the air flow by adjusting the rotation speed: do not use the pressure relief valve to discharge the exceeding flow.
• Once that the wanted vacuum rated has been attained it is recommendable to decrease the speed, (see par. 2.3). This useful procedure, that will not increase the time requested to fill up the tank, will however result in a lesser wear of the vanes. It is suggested to reduce the speed also when operating with pressure.
• When, exhaust temperature is reduced, vane durability is increased and both oil consumption and power absorption are reduced.

Once the needed vacuum rate has been reached, we recommend reducing the vacuum pump speed to its working speed.

• After operation in dusty environments, after accidental sucking of liquids inside the pump or before a long inoperativity period it is recommended to wash the pump inside according to the following procedure:

1. Before washing the pump, be sure that it has cooled down. To obtain this in a short time, it is possible to run the pump for a few minutes at zero vacuum conditions, or stop it at all;

Attention: Do not carry out this operation on very hot pumps (for example after a working day) until they have cooled down.

2. Use 1-2 liters of water mixed with a non-flammable detergent. We suggest some product like Henkel Bonderite C-NE 5225: 5% concentration in water. This detergent grants a good protection against rust and oxidation.
3. Use one of the openings placed in the vacuum line (closet on the pump) to suck some water mixed with detergent.
4. Start the pump at low speed leaving opened all the suction valves in the tank, in order to keep low the vacuum rate (max vac. 10-20%). Let the detergent mix entering the pump very slowly.
5. The detergent mix stays suspended in the pump inside, before being expelled through the exhaust silencer.
6. After keeping the pump speed for a while to make the product reaching the internal parts, it is necessary to dry the pump preventing oxidation. When the detergent mix is finished, continue running the pump at the lo west possible vacuum rate for a few minutes, then close venting and suction valves up to 50-60% maximum, for a couple of minutes. With this operation the pump will dry from the heated air and protected from the chemical attack of the detergent.
7. Washing the pump with this detergent guarantees a protection after some days of inoperativity. If the pump is not used for more than two weeks, after having washed and dried the inner parts as described above, it is recommended to suck slowly 200 cc anti-rust and water-repellent protective oil (or, if not available, a very fluid gear oil).

Attention: do not carry out also this operation on very hot pumps (for example after a working day) until they have cooled down.

In case the exhaust line cannot be disconnected, drain the liquids accumulated in the separator of the exhaust silencer.

• Do not convey the exceeding flow outlet towards the suction port.
• Control the air flow by adjusting the rotation speed: do not use the safety relief valve to discharge the exceeding flow.
• Do not squeeze the hoses/pipes.
• If the decompressor operates in vacuum or under pressure with a capacity environment (such as a cistern) and is configured in the “FL”

flanged version (without manifold with 4-way valve and non-return vale), it is advisable to intercept the working line of the machine when it is stopped, to prevent contrary rotations until the rebalancing of the pressures. The interception can take place through a controlled valve or an automatic unidirectional valve (swing valve).

• Avoid starting the pump under load: motor and drive system can be excessively stressed.

• With temperature below 5 °C (40 °F) and long periods of inactivity, introduce some quantity of oil through the suction connection before starting off the pump.

• The air injection cooling system grants the use of the vacuum pump at high vacuum rates. Anyway, it has to be remembered that the pump has been designed for non-continuous work. This cooling system allows to dissipate part of the accumulated heat still at satisfactory lubrication conditions. Continuous, heavy-duty work, or prolonged work periods will cause an over-heating of the pump, consequently reducing performances and durability.

• With the PNR models it is quite normal that the vacuum rate in the tank will fall down at about 50%, if and when the pump is stopped for sufficient time. This because atmospheric air will flow back in the tank through the injection valves, which are adjusted at approximately 0,5 bar. Vent the tank and take it to atmospheric pressure when stopping the pump in order to avoid back rotation of the pump.

6. Maintenance

6.1. Ordinary maintenance

• Any interventions must be performed when the machine is cold, stopped and switched off.

• Installation and maintenance must be operated only by qualified personnel wearing the proper clothes and the necessary tools as well as protection devices.

• Use suitable protection equipment (gloves, protection glasses, boots...)

• In the following table summarizes the main controls to be performed and the frequency of intervention.

Operating Condition	Maintenance Area	Check	8H	50H	500H	1000H
OPERATING	Vacuum line	Check safety valve (non-return valve)	■			
		Operating pressure	■			
	Transmission / Pump	Lubrication: dripping into oilers (PNR/E 73-83 e PNR 142)	■			
		Rotation speed	■			
		Sound pressure level (also HDR motor)	■			
STANDSTILL	Vacuum line	Suctions filters	■			
	Pump	4-way changeover valve: check and lubricate		■		
		Clean oilers glasses (PNR/E 73-83 e PNR 142)		■		
		Check oil level	■			
		Check vanes wear			■	
		Change oil [1]			■	
		Pump's inner washing [2]				
	Overall	Greasing		■		
		Check cardan shaft drive				■
		Chack transmission pulley				■
		Swing valve wear check				■

[1] The first oil change must be done inside 500 hours operation. Following changes every 5000 hours or 12 months. In order to choose the most suitable oil, see paragraph 2.5.

[2] After operation in dusty environments, after accidental sucking of liquids inside the pump or before a long inoperativity period it is recommended to wash the pump inside according to the procedure described at paragraph 5.2.

Checking the oil tank level

• Before starting the machine, check the lubricating oil level.

• Do not run the pump with oil level under the minimum level: that may lead to dry functioning and cause serious damages. (Pic. 6.1).

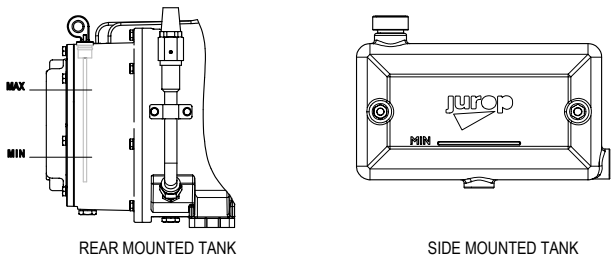

REAR MOUNTED TANK SIDE MOUNTED TANK

Pic. 6.1

• Rear mounted tank capacity: 3,2 l.

• Side mounted tank capacity: 4 l.

• See paragraph 2.2 for the oil consumption of each model.

• Top up with fresh and clean oil only; use the oil required in paragraph 2.5 or equivalent.

• The oil must be topped-up with the machine stopped and cold.

Do not reuse the oil collected by the separator applied to the pump drain.

• Apply the safety requirements indicated in chapter "Safety and accident prevention" before topping-up.

Checking the gearbox oil level

• The oil must be topped-up with the machine stopped and cold.

• Apply the safety requirements indicated in chapter "Safety and accident prevention" before topping-up.

• The oil level in the gearbox must reach the side discharge hole.

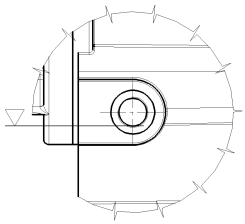

Pic. 6.2

• For the replacement, drain the oil from the gearbox through the lower discharge plug and top-up through the upper filling plug until it comes out of the side discharge hole.

• See the table in paragraph 6.1 for the frequency with which to replace the oil.

Dispose of exhausted oil as provided by current specification.

• Top up with fresh and clean oil only; use the oil required in paragraph 2.5 or equivalent.

• During the oil replacement, also replace the discharge plug washer.

Lubrication control (PNR-PNE73-83 e PNR142)

• Check that the lubricant drips properly into the oilers: 60 droplets/min at maximum speed. For lower speeds: the number of droplets is directly proportional.

• Keep the glass of the oilers clean and in an accessible position.

If lubrication is missing, the decompressor heats up and the internal components quickly deteriorate. Stop the decompressor, check the oil level and the lubrication pump.

• Temporary build-up of lubricant in the oilers is possible:

– during pressurised service even with regular dripping;
– with the decompressor stopped.

• This phenomenon:

– is transient: the oilers empty during the subsequent vacuum operation;
– this does not indicate faults and does not jeopardise lubrication of the internal parts during pressurised operation.

Once pump is stopped, oilers may be filled up with oil. This does not mean any pump failure because oilers will get empty on next pump-vacuum mode start.

• During vacuum operation, the build-up of oil in the oilers could indicate insufficient lubrication. Check:

– piping: it could be obstructed or crushed.
– fittings: they could be loosened.

Checking the vanes wear

• Unscrew the vanes wear check-plug on the front flange (pic. 4.1 – pos. 3).

• Turn the shaft by hand until vanes appearance.

• Vanes usually slip on seat bottom due to gravity. Check their right entry in the seat.

• Insert a Ø 6 mm stick until it touches the rotor and then mark like in pic. 6.3.

• Turn the rotor slowly until the stick touches the vane in idle position in its seat. The vanes slide to the bottom of the seat due to gravity: check they really do and mark again on the stick.

• Repeat the same procedure for all the vanes. If wear exceeds 10 mm: replace the vanes as soon as possible.

• Replace all the pump vanes at the same time.

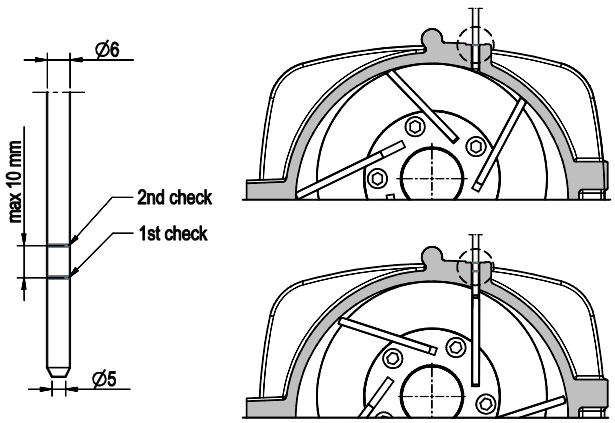

Pic. 6.3

Replace the vanes when their wear exceeds 10 mm (L – L min): they may break. Replace all vanes at the same time.

• Replace the vanes when their wear exceeds 10 mm (L – L min): they may break. Replace all vanes at the same time.

6.2. Extraordinary maintenance

• Except for the cases described below, extraordinary maintenance on a PNR/E must be carried out by specialized personnel only; otherwise, the guarantee will be invalidated.

• All extraordinary maintenance interventions must be carried out when the machine is cold, stopped and switched off. Implement the safety instructions reported in the "Safety and accident prevention" Chapter, before performing any maintenance operation.

Follow the safety prescriptions as described in Cap. "Safety and accident prevention".

Replacing the vanes (PNR/PNE 73-83-104-124)

• Remove the vacuum pump from its bearing frame and wash it before disassembling.

• It is suggested to remove the oil tank on the rear part because generally the pump's drive components are fitted on the front flange. Use always the specific kit of gaskets for the pump model at hand (see also spare parts list).

• Material that is subject to wear: replace.

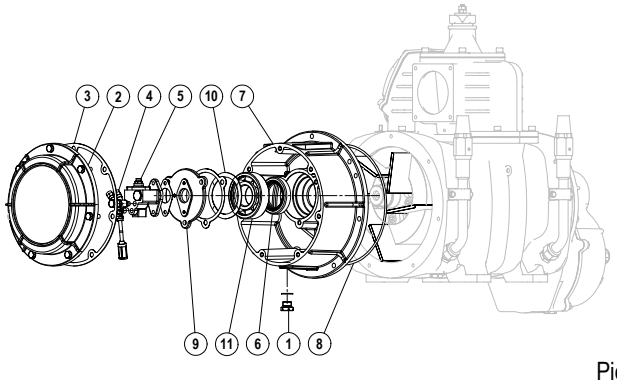

Pic. 6.4

Pos.	Code	Description
1	1684000000	PLUG 3/8
2	1640101200	TANK'S CAP
3	1680707700	CAP'S GASKET
4	4026706101	PIPE'S FITTING
5	4024251000	OIL PUMP (RIGHT)
	4024251500	OIL PUMP (LEFT)
6	4022200111	SEAL 72X48X15
7	16125006E0	OIL TANK
8	4022200309	OR
9	1610508500	PUMP'S FLANGE
10	4026300020	COMPENSATION RING
11	4023100040	BEARING

Disassemble operation

• Drain the oil tank through the proper port (1).

• Remove the tank's cap (2) and change the gasket (3); unscrew the lubrication pipe's fittings (4) connecting the oil pump to the oilers.

• Remove the oil pump (5).

• Remove the screws fixing the oil tank (7) and carefully remove it, eventually using two screws partially winded inside the threads. Avoid that the rotor falls down inside the housing, supporting it if necessary with adequate tools.

• Change the OR (8).

• Remove the oil pump's flange (9), the compensation ring (10) and the bearing (11) this will make the reassembly of the oil tank much easier (7).

• Lubricate the new vanes before inserting them in the rotor's slots.

• The new vanes have to be inserted with the rounded corner facing towards the housing (See Pic. 6.5).

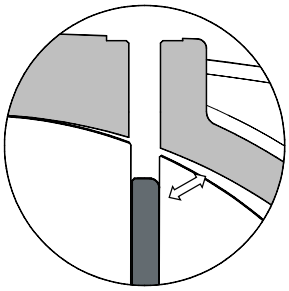

Pic. 6.5

Assemble operation

• Reassemble everything again in the right sequence, absolutely avoiding to leave foreign parts inside the pump. Always change all the gaskets and the OR after having them properly lubricated and also the seal (6) if necessary. ut some grease in the space between the bearing (11) and the flange (9).

• Reassemble the oil tank (7) and the OR (8) carefully inserting the drive shaft without damaging the seal.

• Insert the bearing (11), the compensation ring (10), and the oil pump's flange (9).

• Insert correctly the lubrication pump in the driving slot and refit the flange.

• Reassemble the lubrication pipes and fittings.

• Reassemble the tank's cap (2) and the gasket (3).

• Replace the plug on the tank (1) and refill it with lubrication oil.

Replacing the vanes (PNR 142)

• Remove the vacuum pump from its bearing frame and wash it before disassembling.

• It is suggested to remove the oil tank on the rear part because generally the pump's drive components are fitted on the front flange. Use always the specific kit of gaskets for the pump model at hand (see also spare parts list)

• Material that is subject to wear: replace.

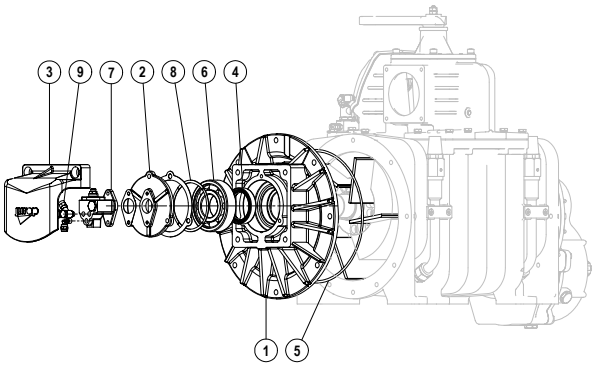

Pic. 6.6

Pos.	Code	Description
1	1610508100	FLANGE
2	1610512900	PUM'S FLANGE
3	1642100200	REAR PROTECTION
4	4022200113	SEAL 70X55X15
5	4022200311	OR
6	4023100150	BEARING
7	4024251000	OIL PUMP (RIGHT)
	4024251500	OIL PUMP (LEFT)
8	4026300025	COMPENSATION RING
9	4026706101	PIPE'S FITTING

Disassemble operation

• Remove the rear protection (3).

• Unscrew the lubrication pipe's fittings connecting the oil pump (9) to the oilers.

• Remove the oil pump (7).

• Remove the screws fixing the flange (1) and carefully remove it, eventually using two screws partially winded inside the threads. Avoid that the rotor falls down inside the housing, supporting it if necessary with adequate tools.

• Change the OR (5).

• Remove the oil pump's flange (2), the compensation ring (8) and the bearing (6) this will make the reassembly of the oil tank much easier.

• Lubricate the new vanes before inserting them in the rotor's slots.

• The new vanes have to be inserted with the rounded corner facing towards the housing (See Pic. 6.5).

Assemble operation

• Reassemble everything again in the right sequence, absolutely avoiding to leave foreign parts inside the pump. Always change all the gaskets and the OR (5) after having them properly lubricated and also

the seal (4) if necessary. Put some grease in the space between the bearing (6) and the flange (1).

• Reassemble the flange (1), and the OR (5) carefully inserting the drive shaft without damaging the seal (4).

• Insert the bearing (6), the compensation ring (8) and the oil pump's flange (2).

• Insert correctly the lubrication pump (7) in the driving slot and refit the flange.

• Reassemble the lubrication pipes and fittings.

• Reassemble the rear protection (3).

General warnings

• On direct drive models normally it is not necessary to remove the front small flange. However, if this has to be done do not forget to grease the underneath bearing.

• The front bearing has been greased during pump's assembling. Lubrication of said bearing is necessary after long working periods only (for example, normal duration of a set of vanes). It is consequentely suggested to pump carefully new grease through the lubrication nipple in order to avoid damages to the seals.

• When changing the vanes do not forget to carefully clean all the components that you have dismantled. Clean the oil filter and the oil tank from the solid sediments. The models PNR142, are provided with a side oil tank; be careful to the maximum tight torque of the oil filter plug. Maximum torque: 10Nm.

Mounting the hydraulic drive

• We recommend the drive coupling be oiled when vanes are being replaced.

• However, lubricate the drive coupling every 1500 hours.

We recommend the drive coupling be oiled every 1500 hours.

• Apply coupling hub to vacuum pump axis respecting the position marked during disassembly: the grain must go back into the seat on the rim.

• Mount the coupling and lubricate internally with NLGI 2 Lithium grease. Provide an adequate quantity of fat, in order to have a medium filling.

• Reassembly the motor without forcing onto the seals.

Adjusting the self-lubricating pump

• The automatic lubricating pump is adjusted by the manufacturer before the shipping.

• If consumption noticeably differs from the indicated value, adjust it as follows:

– Remove the upper protection cover;
– Using a screwdriver and a 10 mm wrench, adjust the adjusting screw (K). Close the nut and remount the upper protection cover;
– It is advisable to turn the screw of ¼ of turn and verify the actual consumption.

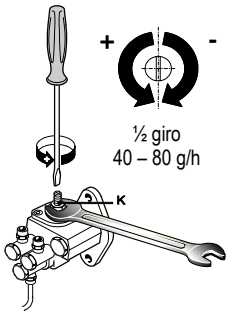

Pic. 6.7

Do not reduce oil consumption below the value indicated in par. 2.2 (for functioning at speeds different from the maximum, flow is proportionate to rotating speed).

• ½ turn of the adjusting screw causes a variation in the flow of approximately **40 - 80 g/h**, depending on using conditions.

Cleaning of the inside exhaust port of the pump housing and the 4-way manifolds

• Frequency: at every changing of the vanes.

• How to proceed: dismantle the manifold and remove possible oil scales or other foreign parts.

• The clogging-up of this manifold and the exhaust port depends mainly from heavy duty use of the pump and causes an increase of temperature and a non-perfect closing of the check valve. A careful cleaning of all components, including the insides of the housing and the non-return check valve and its seat, is therefore strongly recommended.

7. Malfunctions: troubleshooting

PROBLEMS

OVERHEATING	
Cause	**Solution**
• Faulty lubrication	• Check the oil pump
• Missing oil	• Fill up the oil tank
• Revolutions to high	• Reduce the speed
• Operating time too long at too high vacuum rate	• Decrease the vacuum rate
• Clogged filters on the air injection system	• Clean the filters
• Insufficient diameter of vacuum and discharge line	• Check the correct dimensions of the line (minimum suggested 3")

THE PUMP IS BLOCKED	
Cause	**Solution**
• Brocken vanes:	• Dismantle the pump and change the vanes
– due to foreign parts	• Check/clean the filters and elements on the vacuum line
– due to faulty lubrication	• Check the lubrication pump
• Damaged drive system	• Change the damaged parts
• Frozen up pump	• Warm-up the pump

REDUCED PERFORMANCES	
Cause	**Solution**
• 4-way valve handle in neutral position	• Move the handle against the resting pin
• Worn vanes	• Change the vanes
• Leaking check valve	• Clean the check valve
• Worn O-rings	• Change the seals
• Leaking gaskets and/or valves on the vacuum tank	• Change that damaged parts
• Clogged connecting pipeline	• Change the damaged hoses - pipes
• Floating ball or air filter obstructed	• Dismantle and clean
• Crusted up exhaust manifold	• Dismantle and clean
• Vacuum line components under-dimensioned	• Check the dimensioning for the pump model at hand
• Rubber connection obstructed or damaged	• Change the connections

ABNORMAL OIL CONSUMPTION	
Cause	**Rimedi**
• Insufficient lubrication	• Adjust the oil pump flow
• Excessive oil consumption	• Loss of adjustment of the oil pump • Probable wear or breakage of the seal rings of the vacuum pump shaft. Replace them • Check the fittings built on the automatic oil pump and screw tight

8. Scrapping

• Recycling materials allow reducing the environmental impact and respecting the environment.

• Before scrapping the machine, the following materials need to be separated and suitably disposed of.



Do not dispose of in the environment. Dispose of in compliance with the standards in force.

Material	Cast Iron	Steel	Alluminum	Copper	Bronze	Rubber	Vane	Oil	Plastic
PNR-PNE 73	83 %	14 %	1 %	0,1 %	0,1 %	0,1 %	1 %	0,4 %	0,3 %
PNR-PNE 83	84 %	13 %	1 %	0,1 %	0,1 %	0,1 %	1 %	0,4 %	0,3 %
PNR-PNE 104	87 %	10 %	0,7 %	0,3 %	0,1 %	0,1 %	0,6 %	0,6 %	0,2 %
PNR-PNE 124	88 %	10 %	0,6 %	0,3 %	0,1 %	0,1 %	0,7 %	0,5 %	0,2 %
PNR 142	91 %	7 %	0,5 %	0,2 %	0,1 %	-	0,5 %	0,5 %	0,2 %

9. Accessories

Silenciers / Oil separators

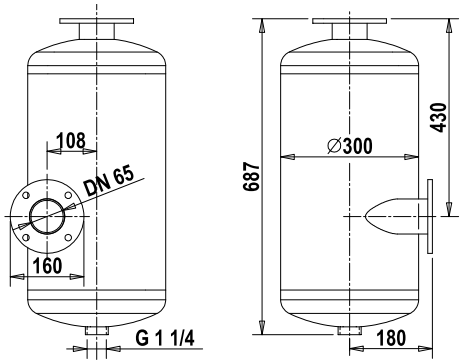

MODEL	PNR-PNE 73-83
TYPE	DISCHARGE
CODE	15470 043 00
MAX FLOW	540 m³/h
OIL TRAP	3,8 l
WEIGHT	27 kg

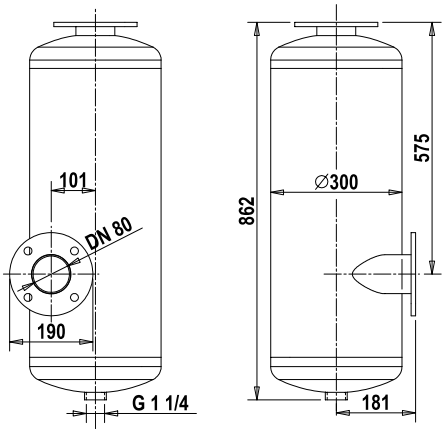

MODEL	PNR-PNE 104-124 – PNR 142
TYPE	DISCHARGE
CODE	15470 D2C B0
MAX FLOW	912 m³/h
OIL TRAP	4,4 l
WEIGHT	35 kg

Note: Direct the silencer discharge output away from the silencer suction inlet in order to prevent the input of hot fluids into the injection inlet.

PNR/PNE 73-83 DIRECT TRANSMISSION

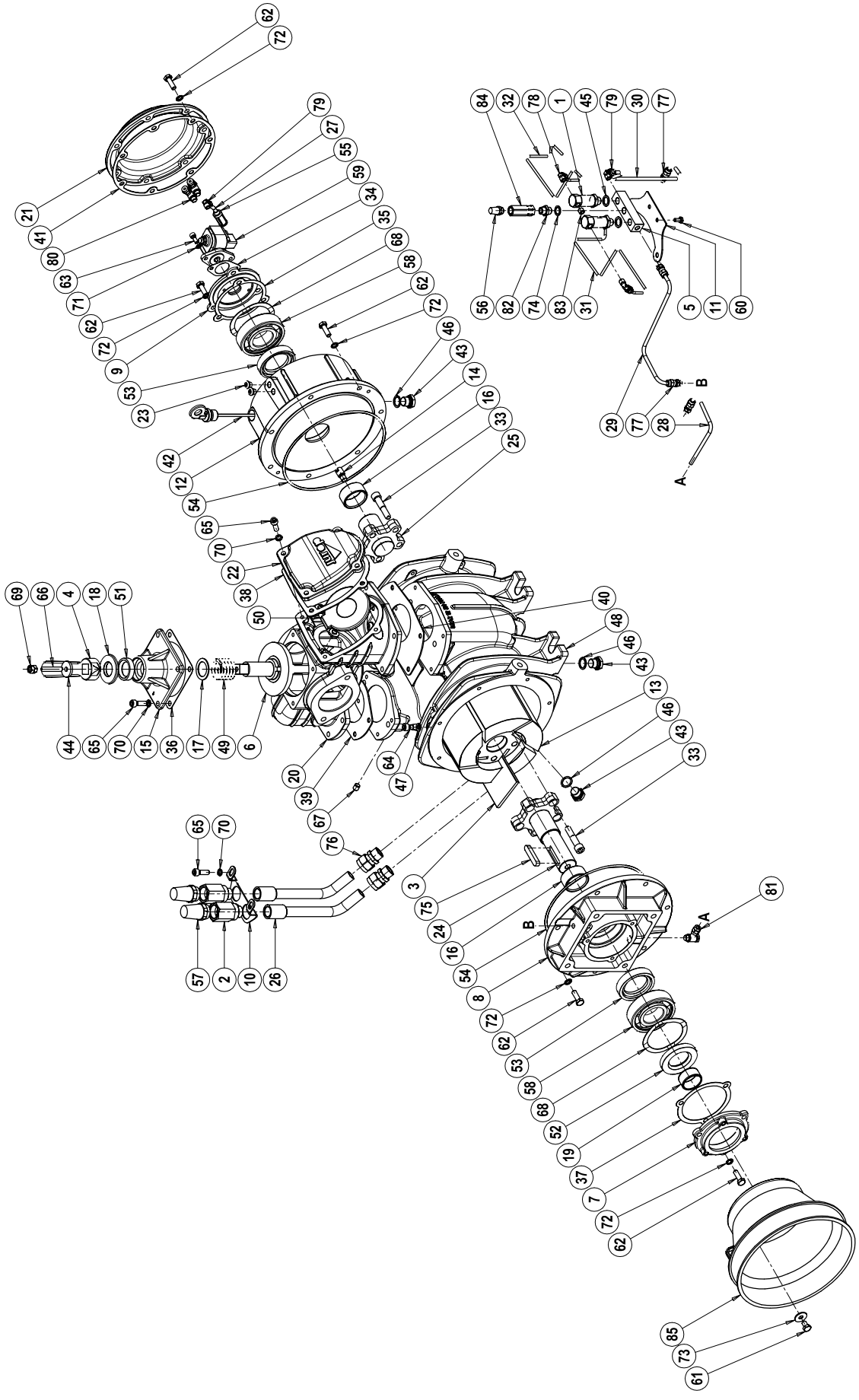

COD. A730809440

PICTURE SHOWS
PNR 73 D SMOOTH SHAFT

PNR/PNE 73-83 DIRECT TRANSMISSION

Pos.	Code	Description	Q.ty
1	1401200700	OIL DRIPPER AUTOMATIC LUBRICATION	2
2	14933006E0	AIR INJECTION VALVE 1/2"	2
3	1601605700	VANE PNR 73	5
	1601605800	VANE PNR 83	5
	1601605300	VANE PNE 73	5
	1601605400	VANE PNE 83	5
4	1605500000	HANDLE	1
5	16081002E0	DISTRIBUTOR	1
6	1608501700	CONVEYOR	1
7	1610500400	FLANGE	1
8	16105013E0	FLANGE	1
9	1610508500	AUTOMATIC LUBRICATION PUMP FLANGE	1
10	16120276H0	AIR INJECTION PIPE BRACKET	1
11	16120816F0	DISTRIBUTOR BRACKET	1
12	16125012E0	OIL TANK	1
13	1621503300	ROTOR PNR/PNE 73	1
	1621503400	ROTOR PNR/PNE 83	1
14	1622002600	SHAFT	1
15	1623100000	CONVEYOR CAP	1
16	1624007500	BUSHING 40X48X22	2
17	162409YKB0	SPACER	1
18	1624202300	SPACER	1
19	1626001300	BUSHING	1
20	16275008E0	MANIFOLD	1
21	1640101100	OIL TANK CAP	1
22	16401098E0	CLAPET CAP	1
23	1642600000	PIPELINE PROTECTION	2
24	1650014200	FRONT SMOOTH SHAFT	1
	1650014100	FRONT SPLINED SHAFT	1
25	1650014300	REAR SHAFT	1
26	1663014000	AIR INJECTION PIPE	2
27	1663041200	SUCTION LINE FOR AUT. LUBR. PUMP	1
28	16630422E0	LUBRICATINGLINE PNR-E 73 D CW/CCW	1
	16630428E0	LUBRICATINGLINE PNR-E 83 D CW/CCW	1
29	16630431E0	FRONT LUBRICATINGLINE PNR-E 73 D CCW	1
	16630421E0	FRONT LUBRICATINGLINE PNR-E 73 D CW	1
	16630434E0	FRONT LUBRICATINGLINE PNR-E 83 D CCW	1
	16630427E0	FRONT LUBRICATINGLINE PNR-E 83 D CW	1
30	16630426E0	REAR LUBRICATINGLINE PNR-E73-83 D CCW	1
	16630425E0	REAR LUBRICATINGLINE PNR-E 73-83 D CW	1
31	16630432E0	FRONT OIL DRIPPER LINE PNR-E 73 D CCW	1
	16630423E0	FRONT OIL DRIPPER LINE PNR-E 73 D CW	1
	16630435E0	FRONT OIL DRIPPER LINE PNR-E 83 D CCW	1
	16630429E0	FRONT OIL DRIPPER LINE PNR-E 83 D CW	1
32	16630433E0	REAR OIL DRIPPER LINE PNR-E 73 D CCW	1
	16630424E0	REAR OIL DRIPPER LINE PNR-E 73 D CW	1
	16630436E0	REAR OIL DRIPPER LINE PNR-E 83 D CCW	1
	16630430E0	REAR OIL DRIPPER LINE PNR-E 83 D CW	1
33	1672001600	SCREW TCEI M10X1,5	10
34	1680609700	OIL PUMP GASKET	1
35	1680609800	OIL PUMP FLANGE GASKET	1
36	1680700200	CONVEYOR GASKET	1
37	1680700400	FLANGE GASKET	1
38	16807020E0	CLAPET GASKET	1
39	16807021E0	MANIFOLD DISCHARGE GASKET	1
40	16807022E0	MANIFOLD SUCTION GASKET	1
41	1680707500	OIL TANK CAP GASKET	1
42	1683600000	OIL STICK 160MM	1
43	1684000000	DRAIN PLUG 3/8	4
44	1685002800	WASHER FE 30X8,5 SP.4 ZIN.	1
45	1685100000	OIL DRIPPER WASHER 14X20X1.5	2
46	1685100200	WASHER ALU. 17X22X1,5	4
47	1685100800	WASHER COP. 8X14X1,5	2
48	16875037E0	PUMP HOUSING PNR-PNE 73	1
	16875038E0	PUMP HOUSING PNR-PNE 83	1
49	1691000000	CONVEYOR SPRING	1
50	18930009E0	CLAPET VALVE	1
51	4022200030	SEAL 41X27X10	1
52	4022200040	SEAL 72X40X10	1
53	4022200111	SEAL 72X48X15	2
54	4022200308	O-RING 4775	2
55	4022300001	NYLON FILTER	1
56	4022301001	SILENCER-FILTER ¼	1
57	4022301004	SILENCER-FILTER ¾	2
58	4023100040	BEARING 6308	2
59	4024251000	AUTOM. LUBRICATION PUMP CW ROTATION	1
	4024251500	AUTOM. LUBRICATION PUMP CCW ROTATION	1
60	4026102702	SCREW TE M 6X12 GALV.	2
61	4026102802	SCREW TE M 8X12 GALV.	3
62	4026102807	SCREW TE M 8X25 GALV.	27
63	4026121305	SCREW TCEI M 6X16 GALV.	2
64	4026121401	SCREW TCEI M 8X12 GALV.	2
65	4026121407	SCREW TCEI M 8X25 GALV.	16
66	4026135414	SCREW M 8X45 GALV.	1
67	4026135504	SCREW 10X10 GALV.	1
68	4026300020	COMPENSATION RING	2
69	4026308005	NUT M 8 ESAG. GALV.	2
70	4026350505	WASHER GROWER 8 GALV.	16
71	4026351504	WASHER M 6 GALV.	2
72	4026351505	WASHER M 8 GALV.	27
73	4026356002	WASHER 8X24	3
74	4026359006	WASHER 13,5X18X1,5	2
75	4026500909	TAB 10X8X50	1
76	4026701301	FITTING	2
77	4026702004	FITTING 6X1/8	4
78	4026706000	FITTING 90°4X1/8	2
79	4026706003	FITTING 90° 6X1/8	2
80	4026706101	FITTING	2
81	4026706104	FITTING	1
82	4026740011	REDUCED NIPPLE G1/4	1
83	4026910601	PLUG 1/8'	2
84	4027409920	ONE-WAY VALVE G1/4	1
85	4029602806	DRIVE SHAFT PROTECTION	1
	18920102E0	GASKETS KIT	1

PNR/PNE 73-83 WITH GEARBOX

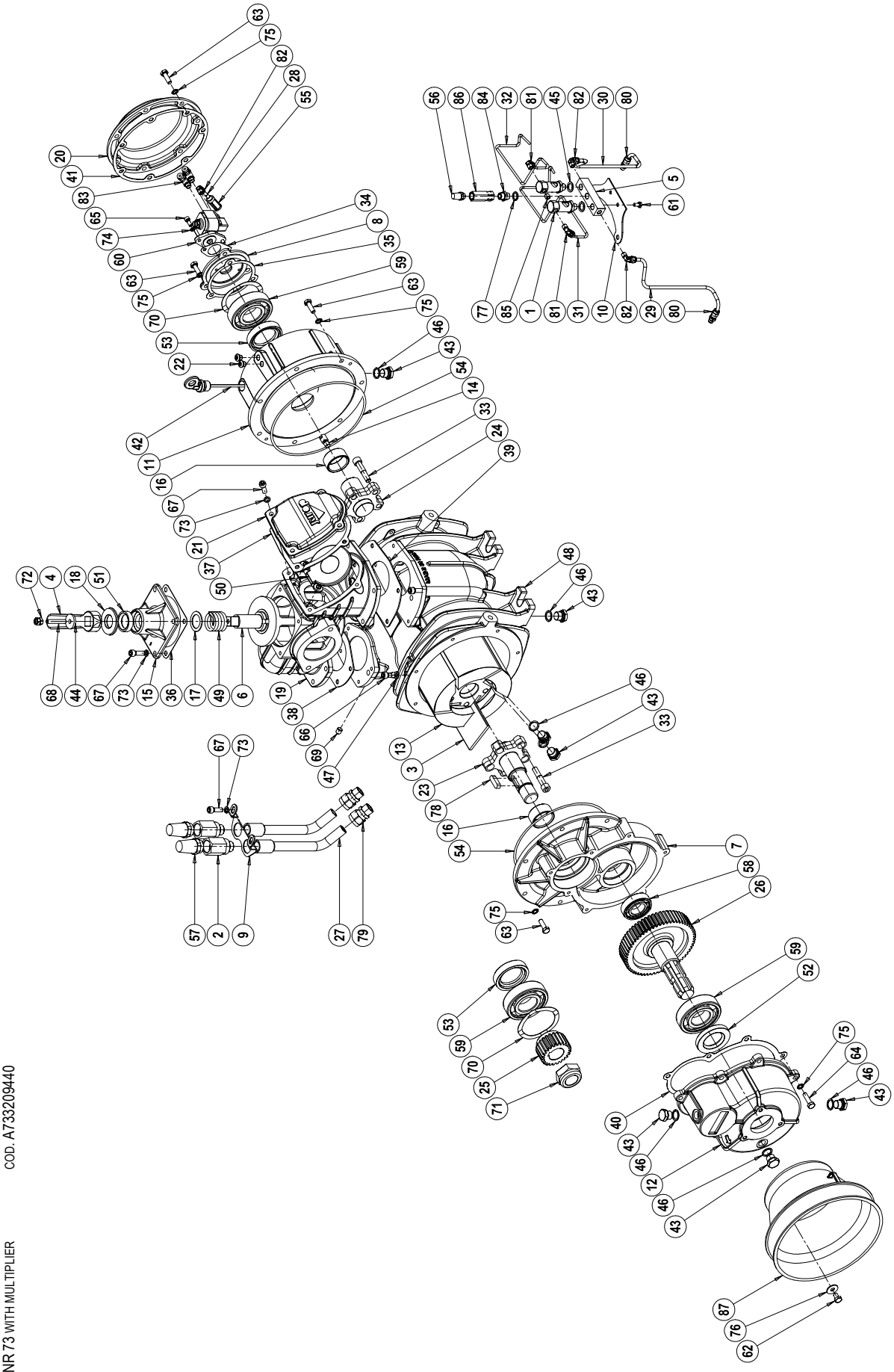

COD. A733209440

PICTURE SHOWS
PNR 73 WITH MULTIPLIER

PNR/PNE 73-83 WITH GEARBOX

Pos.	Code	Description	Q.ty
1	1401200700	OIL DRIPPER AUTOMATIC LUBRICATION	2
2	14933006E0	AIR INJECTION VALVE 1/2"	2
3	1601605700	VANE PNR 73	5
	1601605800	VANE PNR 83	5
	1601605300	VANE PNE 73	5
	1601605400	VANE PNE 83	5
4	1605500000	HANDLE	1
5	16081002E0	DISTRIBUTOR	1
6	1608501700	CONVEYOR	1
7	1610508300	FLANGE	1
8	1610508500	AUTOMATIC LUBRICATION PUMP FLANGE	1
9	16120276H0	AIR INJECTION PIPES BRACKET	1
10	16120816F0	DISTRIBUTOR BRACKET	1
11	16125012E0	OIL TANK	1
12	1612503200	GEARBOX	1
13	1621503300	ROTOR PNR/PNE 73	1
	1621503400	ROTOR PNR/PNE 83	1
14	1622002600	SHAFT	1
15	1623100000	CONVEYOR CAP	1
16	1624007500	BUSHING 40X48X22	2
17	162409YKB0	SPACER	1
18	1624202300	SPACER	1
19	16275008E0	MANIFOLD	1
20	1640101100	OIL TANK CAP	1
21	16401098E0	CLAPET CAP	1
22	1642600000	PIPLINE PROTECTION	2
23	1650014000	FRONT SHAFT	1
24	1650014300	REAR SHAFT	1
25	1651005400	PINION Z24	1
26	1651005600	GEAR Z60	1
27	1663014000	AIR INJECTION PIPE	2
28	1663041200	SUCTION LINE FOR AUT. LUB. PUMP	1
29	16630425E0	FRONT LUBRICATINGLINE PNR-E M CW	1
	16630426E0	FRONT LUBRICATINGLINE PNR-E M CCW	1
30	16630426E0	REAR LUBRICATINGLINE PNR-E M CW	1
	16630425E0	REAR LUBRICATINGLINE PNR-E M CCW	1
31	16630432E0	FRONT OIL DRIPPER LINE PNR-E 73 M CW	1
	16630423E0	FRONT OIL DRIPPER LINE PNR-E 73 M CCW	1
	16630435E0	FRONT OIL DRIPPER LINE PNR-E 83 M CW	1
	16630429E0	FRONT OIL DRIPPER LINE PNR-E 83 M CCW	1
32	16630433E0	REAR OIL DRIPPER LINE PNR-E 73 M CW	1
	16630424E0	REAR OIL DRIPPER LINE PNR-E 73 M CCW	1
	16630436E0	REAR OIL DRIPPER LINE PNR-E 83 M CW	1
	16630430E0	REAR OIL DRIPPER LINE PNR-E 83 M CCW	1
33	1672001600	SCREW TCEI M10X1,5	10
34	1680609700	OIL PUMP GASKET	1
35	1680609800	OIL PUMP FLANGE GASKET	1
36	1680700200	CONVEYOR GASKET	1
37	16807020E0	CLAPET CAP GASKET	1
38	16807021E0	DISCHARGE GASKET	1
39	16807022E0	SUCTION GASKET	1
40	1680707400	GEARBOX GASKET	1
41	1680707500	OIL TANK CAP GASKET	1
42	1683600000	OIL STICK 160MM	1
43	1684000000	DRAIN PLUG 3/8	7
44	1685002800	WASHER FE 30X8,5 SP.4 ZIN.	1
45	1685100000	OIL DRIPPER WASHER 14X20X1.5	2
46	1685100200	ALU WASHER 17X22X1,5	7
47	1685100800	WASHER RAME 8X14X1,5	2
48	16875037E0	PUMP HOUSING PNR-PNE 73	1
	16875038E0	PUMP HOUSING PNR-PNE 83	1
49	1691000000	CONVEYOR SPRING	1
50	18930009E0	CLAPET	1
51	4022200030	SEAL 41X27X10	1
52	4022200040	SEAL 72X40X10	1
53	4022200111	SEAL 72X48X15	2
54	4022200308	O-RING 4775	2
55	4022300001	NYLON FILTER	1
56	4022301001	SILENCER-FILTER ¼	1
57	4022301004	SILENCER-FILTER ¾	2
58	4023100018	BEARING 6206	1
59	4023100040	BEARING 6308	3
60	4024251000	AUTOM. LUBRICATION PUMP CW ROTATION	1
	4024251500	AUTOM. LUBRICATION PUMP CCW ROTATION	1
61	4026102702	SCREW TE M 6X12 GALV.	2
62	4026102802	SCREW TE M 8X12 GALV.	3
63	4026102807	SCREW TE M 8X25 GALV.	24
64	4026102808	SCREW TE M 8X30 GALV.	7
65	4026121305	SCREW TCEI M 6X16 GALV.	2
66	4026121401	SCREW TCEI M 8X12 GALV.	2
67	4026121407	SCREW TCEI M 8X25 GALV.	16
68	4026135414	SCREW M 8X45 GALV.	1
69	4026135504	SCREW M 10X10 GALV.	1
70	4026300020	COMPENSATION RING	2
71	4026305616	NUT M30X2 ESAG. AUTOBL.	1
72	4026308005	NUT M 8 ESAG. GALV.	2
73	4026350505	WASHER GROWER 8 GALV.	16
74	4026351504	WASHER M 6 GALV.	2
75	4026351505	WASHER M 8 GALV.	31
76	4026356002	WASHER 8X24	3
77	4026359006	WASHER 13,5X18X1,5	2
78	4026500905	TAB 10X8X32	1
79	4026701301	FITTING	2
80	4026702004	FITTING 6X1/8	2
81	4026706000	FITTING 90°4X1/8	2
82	4026706003	FITTING 90° 6X1/8	3
83	4026706101	ADJUSTABLE FITTING	2
84	4026740011	REDUCED NIPPLE G1/4	1
85	4026910601	PLUG 1/8'	2
86	4027409920	ONE-WAY VALVE G1/4	1
87	4029602806	DRIVE SHAFT PROTECTION	1
	18920102E0	GASKETS KIT	1

PNR/PNE 104-124 DIRECT TRANSMISSION

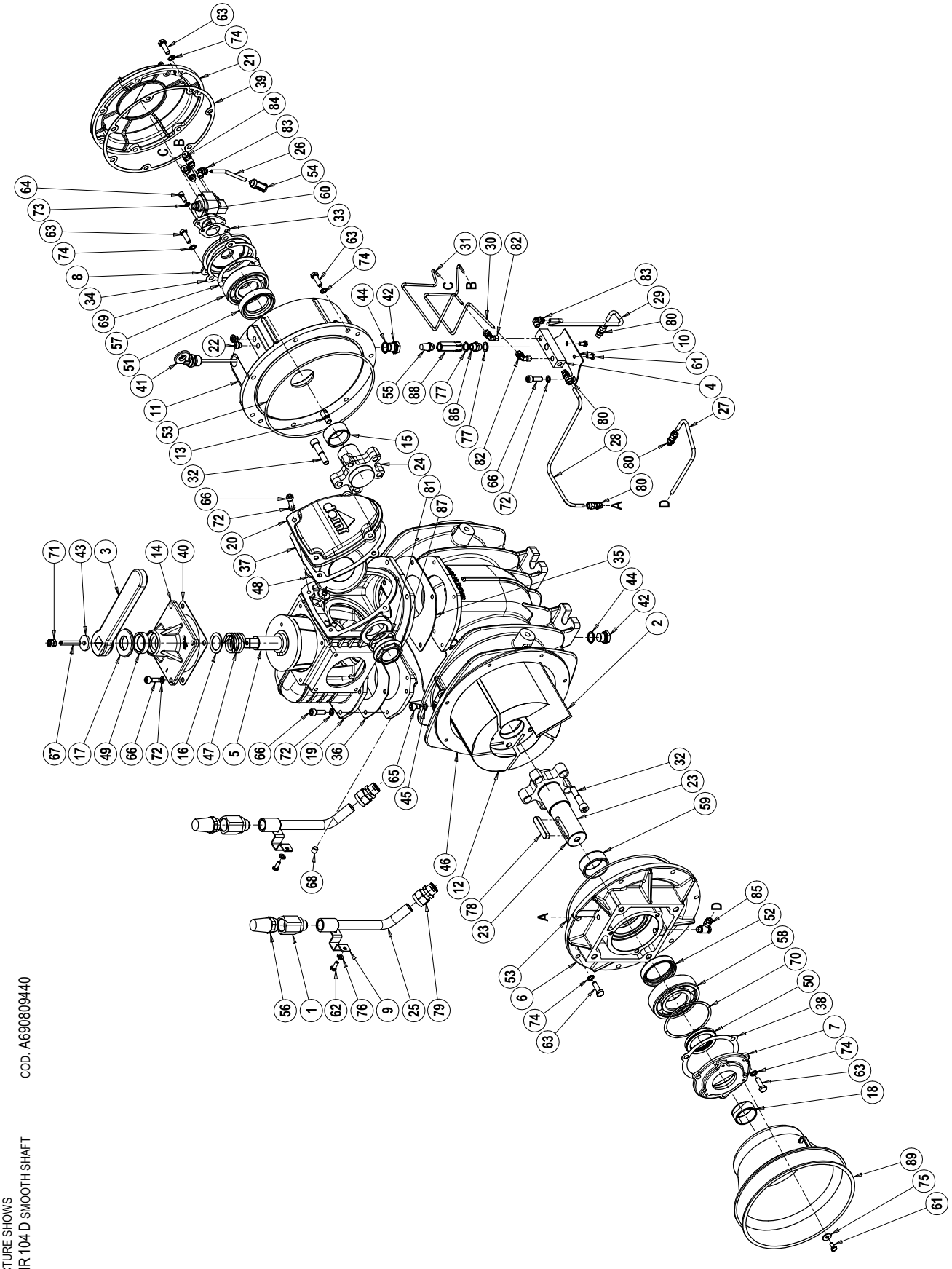

COD. A690809440

PICTURE SHOWS
PNR 104 D SMOOTH SHAFT

PNR/PNE 104-124 DIRECT TRANSMISSION

Pos.	Code	Description	Q.ty
1	14933006E0	AIR INJECTION VALVE 1/2"	2
2	1601605900	VANE PNR 104	5
	1601606000	VANE PNR 124	5
	1601605500	VANE PNE 104	5
	1601605600	VANE PNE 124	5
3	1605500100	HANDLE	1
4	16081001E0	DISTRIBUTOR	1
5	1608502500	CONVEYOR	1
6	16105005E0	FLANGE	1
7	1610508200	FLANGE	1
8	1610508500	AUTOMATIC LUBRICATION PUMP FLANGE	1
9	16120820E0	AIR INJECTION PIPES BRACKET	2
10	16120854E0	DISTRIBUTOR BRACKET	1
11	16125006E0	OIL TANK	1
12	1621503500	ROTOR PNR/PNE 104	1
	1621503600	ROTOR PNR/PNE 124	1
13	1622002600	SHAFT M10	1
14	1623100500	CONVEYOR	1
15	1624007500	BUSHING 40X48X22	1
16	162409YKB0	SPACER	1
17	1624202300	SPACER	1
18	1626001100	BUSHING	1
19	16275006E0	MANIFOLD	1
20	16401008E0	CLAPET CAP	1
21	1640101200	OIL TANK CAP	1
22	1642600000	PIPLINE PROTECTION	2
23	1650014700	FRONT SMOOTH SHAFT	1
	1650014600	FRONT SPLINED SHAFT	1
24	1650014800	REAR SHAFT	1
25	1663014000	AIR INJECTION PIPE	2
26	1663041100	SUCTION LINE FOR AUTOM. LUBR. PUMP	1
27	16631030E0	LUBRICATINGLINE PNR-E 104 D CCW	1
	16631033E0	LUBRICATINGLINE PNR-E 104 D CW	1
	16631037E0	LUBRICATINGLINE PNR-E 124 D CCW	1
	16631035E0	LUBRICATINGLINE PNR-E 124 D CW	1
28	16631031E0	FRONT LUBRICATINGLINE PNR-E 104 D CCW	1
	16631032E0	FRONT LUBRICATINGLINE PNR-E 104 D CW	1
	16631036E0	FRONT LUBRICATINGLINE PNR-E 124 D CCW	1
	16631034E0	FRONT LUBRICATINGLINE PNR-E 124 D CW	1
29	16631024E0	REAR LUBRICATINGLINE PNR-E 104 D CCW	1
	16631025E0	REAR LUBRICATINGLINE PNR-E 104 D CW	1
	16631020E0	REAR LUBRICATINGLINE PNR-E 124 D CCW	1
	16631021E0	REAR LUBRICATINGLINE PNR-E 124 D CW	1
30	16631028E0	FRONT OIL DRIPPER LINE PNR-E 104 D CCW	1
	16631022E0	FRONT OIL DRIPPER LINE PNR-E 104 D CW	1
	16631026E0	FRONT OIL DRIPPER LINE PNR-E 124 D CCW	1
	16631018E0	FRONT OIL DRIPPER LINE PNR-E 124 D CW	1
31	16631029E0	REAR OIL DRIPPER LINE PNR-E 104 D CCW	1
	16631023E0	REAR OIL DRIPPER LINE PNR-E 104 D CW	1
	16631027E0	REAR OIL DRIPPER LINE PNR-E 124 D CCW	1
	16631019E0	REAR OIL DRIPPER LINE PNR-E 124 D CW	1
32	1672001600	SCREW TCEI M10X1,5	10
33	1680609700	OIL PUMP GASKET	1
34	1680609800	OIL PUMP FLANGE GASKET	1
35	16807009E0	SUCTION GASKET	1
36	16807010E0	DISCHARGE GASKET	1
37	16807011E0	CLAPET CAP GASKET	1
38	1680707300	FRONT FLANGE GASKET	1
39	1680707700	OIL TANK GASKET	1
40	1680707800	CONVEYOR GASKET	1
41	1683600300	OIL STICK	1
42	1684000000	DRAIN PLUG 3/8	4
43	1685002800	WASHER FE 30X8,5 SP.4 ZIN.	1
44	1685100200	ALU. WASHER 17X22X1,5	4
45	1685100800	COP. WASHER 8X14X1,5	2
46	16875020E0	HOUSING PUMP PNR-PNE 104	1
	16875019E0	HOUSING PUMP PNR-PNE 124	1
47	1691000000	CONVEYOR SPRING	1
48	18930008E0	CLAPET	1
49	4022200030	SEAL 41X27X10	1
50	4022200044	SEAL 65X45X8	1
51	4022200111	SEAL 72X48X15	1
52	4022200113	SEAL 70X55X15	1
53	4022200309	O-RING 4875 VITON	2
54	4022300001	NYLON FILTER	1
55	4022301001	SILENCER-FILTER ¼	1
56	4022301004	SILENCER-FILTER ¾	2
57	4023100040	BEARING 6308	1
58	4023100046	BEARING 6309	1
59	4023130035	BUSHING 55X45X22	1
60	4024251000	AUTOM. LUBRICATION PUMP CW ROTATION	1
	4024251500	AUTOM. LUBRICATION PUMP CCW ROTATION	1
61	4026102702	SCREW TE M 6X12 GALV.	5
62	4026102704	SCREW TE M 6 X 16 GALV.	4
63	4026102807	SCREW TE M 8 X 25 GALV.	27
64	4026121305	SCREW TCEI M 6 X 16 GALV.	2
65	4026121401	SCREW TCEI M 8 X 12 GALV.	2
66	4026121407	SCREW TCEI M 8 X 25 GALV.	16
67	4026135414	SCREW M 8X45 GALV.	1
68	4026135504	SCREW M 10 X 10 GALV.	1
69	4026300020	COMPENSATION RING	1
70	4026300025	COMPENSATION RING	1
71	4026308005	NUT M 8 ESAG. GALV.	2
72	4026350505	WASHER GROWER 8 GALV.	16
73	4026351504	WASHER M 6 GALV.	2
74	4026351505	WASHER M 8 GALV.	27
75	4026356001	WASHER 6X18 GALV.	3
76	4026357003	WASHER M6 GALV.	4
77	4026359006	WASHER 13,5X18X1,5	2
78	4026501006	TAB 12X8X56	1
79	4026701301	FITTING	2
80	4026702004	FITTING	4
81	4026702708	COPPER WASHER 1"½	1
82	4026706000	FITTING 90°4X1/8	2
83	4026706003	FITTING 90° 6X1/8	2
84	4026706101	ADJUSTABLE FITTING	2
85	4026706104	ADJUSTABLE FITTING	1
86	4026740011	REUCED NIPPLE G1/4	1
87	4026904005	PLUG 1"½	1
88	4027409920	ONE-WAY VALVE G1/4	1
89	4029602806	DRIVE SHAFT PROTECTION	1
	18920026E0	GASKETS KIT	1

PNR/PNE 104-124 WITH GEARBOX

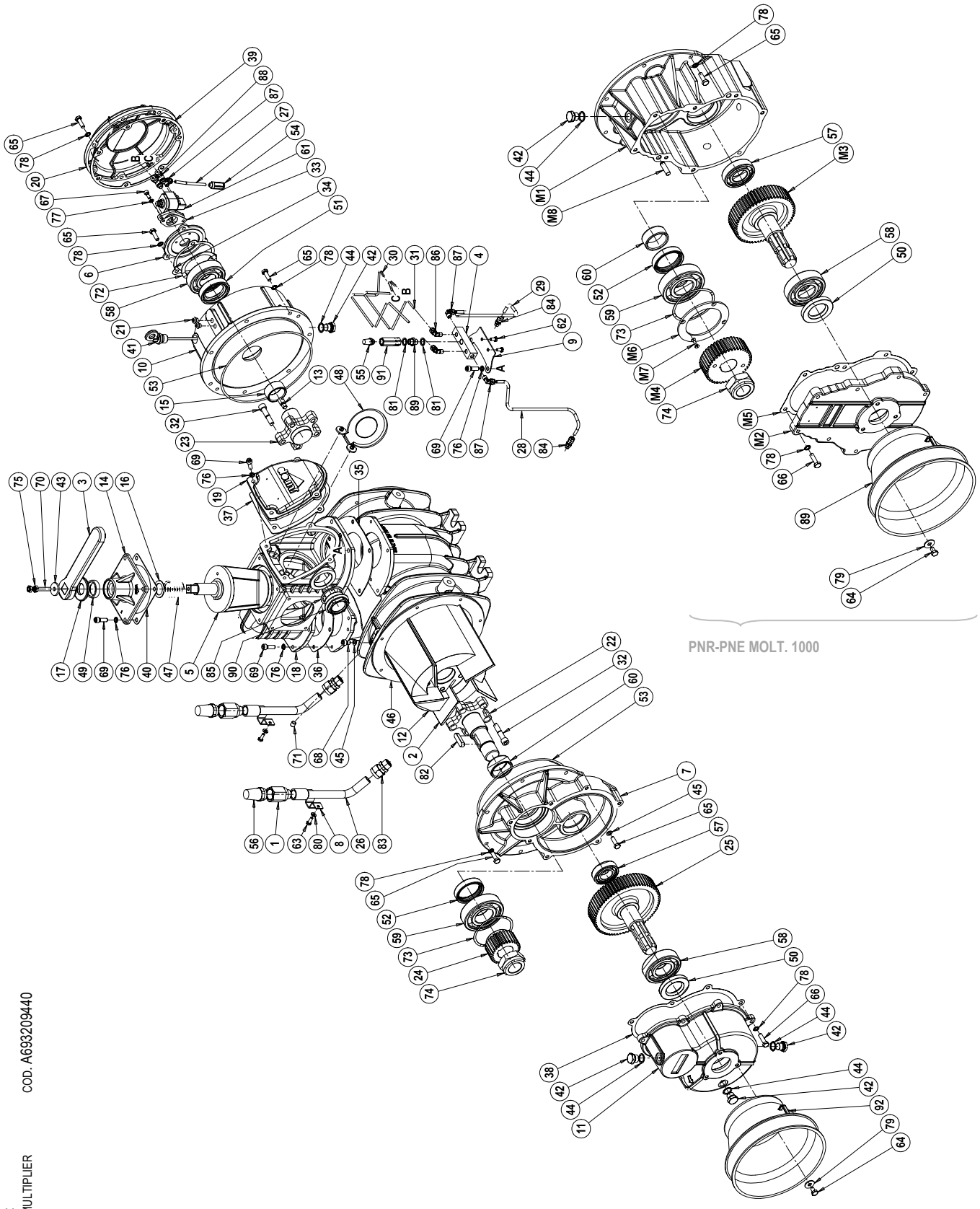

COD. A693209440

PICTURE SHOWS:
PNR 104 WITH MULTIPLIER

PNR/PNE 104-124 WITH GEARBOX

Pos.	Code	Description	Q.ty
1	14933006E0	AIR INJECTION VALVE 1/2"	2
2	1601605900	VANE PNR 104	5
	1601606000	VANE PNR 124	5
	1601605500	VANE PNE 104	5
	1601605600	VANE PNE 124	5
3	1605500100	HANDLE	1
4	16081001E0	DISTRIBUTOR	1
5	1608502500	CONVEYOR	1
6	1610508500	AUTOMATIC LUBRICATION PUMP FLANGE	1
7	1610508700	GEARBOX FLANGE	1
8	16120820E0	AIR INJECTION PIPES BRACKET	2
9	16120854E0	DISTRIBUTOR BRACKET	1
10	16125006E0	OIL TANK	1
11	1612503500	GEARBOX	1
12	1621503500	ROTOR PNR/PNE 104	1
	1621503600	ROTOR PNR/PNE 124	1
13	1622002600	SHAFT	1
14	1623100500	CONVEYOR	1
15	1624007500	BUSHING 40X48X22	1
16	162409YKB0	SPACER	1
17	1624202300	SPACER	1
18	16275006E0	MANIFOLD	1
19	16401008E0	CLAPET CAP	1
20	1640101200	OIL TANK CAP	1
21	1642600000	PIPELINE PROTECTION	2
22	1650014500	FRONT SHAFT	1
23	1650014800	REAR SHAFT	1
24	1651005500	PINION	1
25	1651005700	GEAR	1
26	1663014000	AIR INJECTION PIPE	2
27	1663041100	SUCTION LINE FOR AUT. LUBR. PUMP	1
28	16631025E0	FRONT LUBRICATING LINE PNR-E 104 M CW	1
	16631024E0	FRONT LUBRICATING LINE PNR-E 104 M CCW	1
	16631021E0	FRONT LUBRICATING LINE PNR-E 124 M CW	1
	16631020E0	FRONT LUBRICATING LINE PNR-E 124 M CCW	1
29	16631024E0	REAR LUBRICATING LINE PNR-E 104 M CW	1
	16631025E0	REAR LUBRICATING LINE PNR-E 104 M CCW	1
	16631020E0	REAR LUBRICATING LINE PNR-E 124 M CW	1
	16631021E0	REAR LUBRICATING LINE PNR-E 124 M CCW	1
30	16631028E0	FRONT OIL DRIPPER LINE PNR-E 104 M CW	1
	16631022E0	FRONT OIL DRIPPER LINE PNR-E 104 M CCW	1
	16631026E0	FRONT OIL DRIPPER LINE PNR-E 124 M CW	1
	16631018E0	FRONT OIL DRIPPER LINE PNR-E 124 M CCW	1
31	16631029E0	REAR OIL DRIPPER LINE PNR-E 104 M CW	1
	16631023E0	REAR OIL DRIPPER LINE PNR-E 104 M CCW	1
	16631027E0	REAR OIL DRIPPER LINE PNR-E 124 M CW	1
	16631019E0	REAR OIL DRIPPER LINE PNR-E 124 M CCW	1
32	1672001600	SCREWTCEI M10X1,5	10
33	1680609700	OIL PUMP GASKET	1
34	1680609800	OIL PUMP FLANGE GASKET	1
35	16807009E0	SUCTION GASKET	1
36	16807010E0	DISCHARGE GASKET	1
37	16807011E0	CLAPET CAP GASKET	1
38	1680707600	GEARBOX GASKET	1
39	1680707700	OIL TANK GASKET	1
40	1680707800	CONVEYOR GASKET	1
41	1683600300	OIL STICK	1
42	1684000000	DRAIN PLUG 3/8	4
43	1685002800	WASHER FE 30X8,5 SP.4	1
44	1685100200	WASHER 17X22X1,5	7
45	1685100800	WASHER 8X14X1,5	4
46	16875020E0	PUMP HOUSING PNR-PNE 104	1
	16875019E0	PUMP HOUSINGPNR-PNE 124	1
47	1691000000	CONVEYOR SPRING	1
48	18930008E0	CLAPET	1
49	4022200030	SEAL 41X27X10	1
50	4022200040	SEAL 72X40X10	1
51	4022200111	SEAL 72X48X15	1
52	4022200113	SEAL 70X55X15	1
53	4022200309	O-RING 4875 VITON	2
54	4022300001	NYLON FILTER	1
55	4022301001	SILENCER-FILTER ¼	1
56	4022301004	SILENCER-FILTER ¾	2
57	4023100018	BEARING 6206 (MULT. 540)	1
	4023100020	BEARING 6207 (MULT. 1000)	1
58	4023100040	BEARING 6308	2
59	4023100046	BEARING 6309	1
60	4023130035	BUSHING 55X45X22	1
61	4024251000	AUTOM. LUBRICATION PUMP CW ROTATION	1
	4024251500	AUTOM. LUBRICATION PUMP CCW ROTATION	1
62	4026102702	SCREW TE M 6X12 GALV.	5
63	4026102704	SCREW TE M 6 X 16 GALV.	4
64	4026102802	SCREW TE M 8X12 GALV.	3
65	4026102807	SCREW TE M 8 X 25 GALV.	24
66	4026102808	SCREW TE M 8 X 30 GALV.	7
67	4026121305	SCREW TCEI M 6 X 16 GALV.	2
68	4026121401	SCREW TCEI M 8 X 12 GALV.	2
69	4026121407	SCREW TCEI M 8 X 25 GALV.	16
70	4026135414	SCREW M 8X45 GALV.	1
71	4026135504	SCREW M 10 X 10 GALV.	1
72	4026300020	COMPENSATION RING	1
73	4026300025	COMPENSATION RING	1
74	4026306115	NUT M 36X3 ESAG. AUTOBL.	1
75	4026308005	NUT M 8 ESAG. GALV.	2
76	4026350505	WASHER GROWER 8 GALV.	16
77	4026351504	WASHER M 6 GALV.	2
78	4026351505	WASHER M 8 GALV.	29
79	4026356002	WASHER 8X24 GALV.	3
80	4026357003	WASHER M6 GALV.	4
81	4026359006	ALU WASHER 13.5X18X1.5	2
82	4026501003	TAB 12X8X40	1
83	4026701301	FITTING	2
84	4026702004	FITTING	2
85	4026702708	FITTING 1"½	1
86	4026706000	FITTING 90°4X1/8	2
87	4026706003	FITTING 90° 6X1/8	3
88	4026706101	ADJUSTABLE FITTING	2
89	4026740011	REDUCED NIPPLE G1/4	1
90	4026904005	PLUG 1"½	1
91	4027409920	ONE-WAY VALVE G1/4	1
92	4029602806	DRIVE SHAFT PROTECTION	1
	18920027E0	GASKETS KIT	1

PNR-PNE GEARBOX 1000

M1	1610514000	GEARBOX	1	M5	1680614100	GEARBOX GASKET	1
M2	1640501200	FRONT CAP	1	M6	1681006500	PLATE	1
M3	1651010600	GEAR (MULTIPLIER 1000)	1	M7	4026155505	SCREW TSPEI 5X16 GALV.	4
M4	1651010700	PINION (MULTIPLIER 1000)	1	M8	4026401806	PIN 10X36	4

PNR 142 DIRECT TRANSMISSION

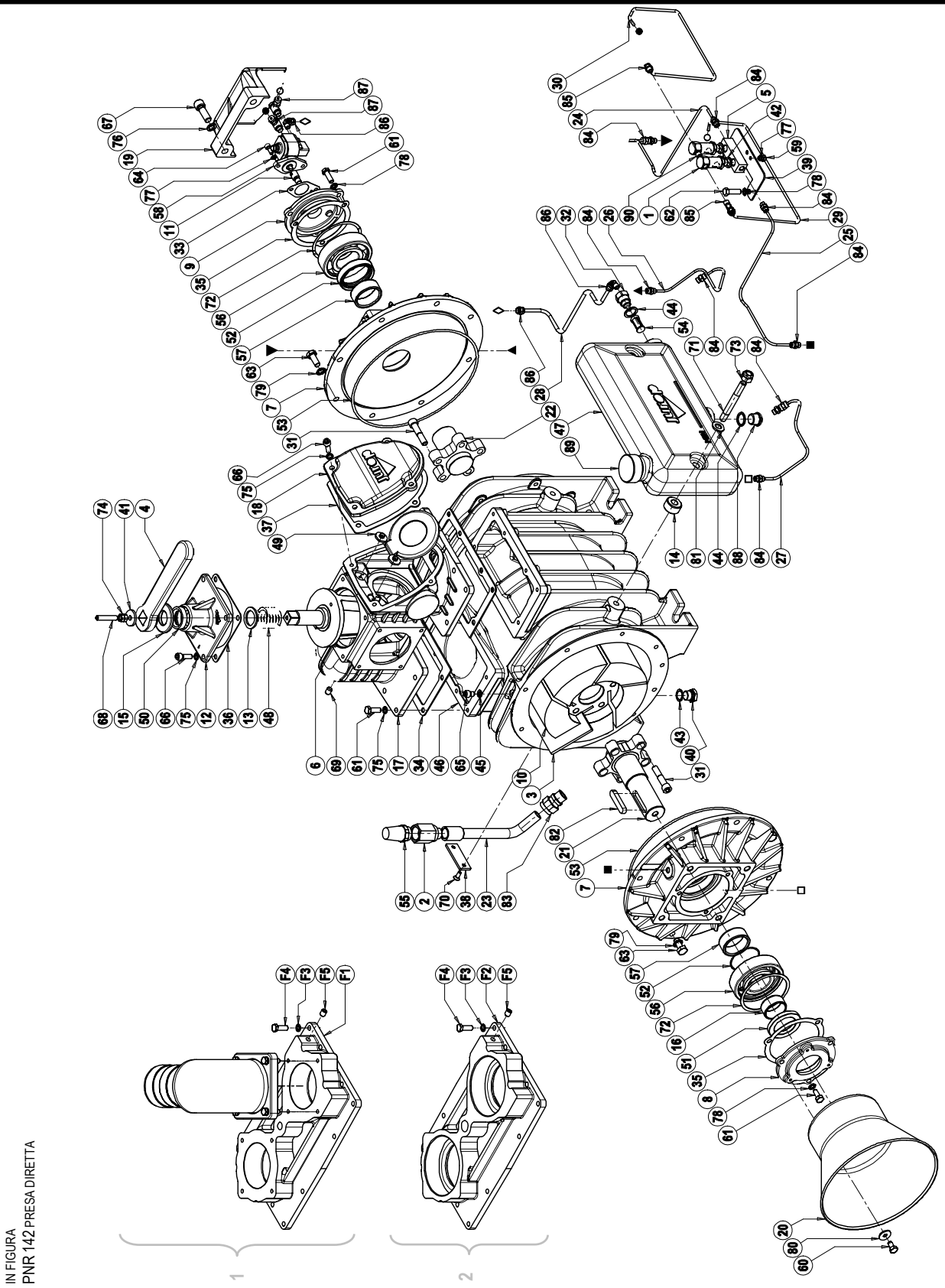

IN FIGURA
PNR 142 PRESA DIRETTA

PNR 142 DIRECT TRANSMISSION

Pos.	Code	Description	Q.ty
1	1401200700	OIL DRIPPER AUTOMATIC LUBRICATION	2
2	14933006E0	AIR INJECTION VALVE 1/2"	2
3	1601605200	VANE	5
4	1605500100	HANDLE	1
5	1608100000	DISTRIBUTOR	1
6	1608502500	CONVEYOR	1
7	1610508100	GEARBOX FLANGE	2
8	1610508200	FLANGE	1
9	1610512900	AUTOMATIC LUBRICATION PUMP FLANGE	1
10	1621503200	ROTOR PNR142	1
11	1622002600	SHAFT	1
12	1623100500	CONVEYOR CAP	1
13	162409YKB0	SPACER	1
14	1624042800	SPACER	2
15	1624202300	SPACER	1
16	1626001100	BUSHING	1
17	16275007E0	MANIFOLD	1
18	16401008E0	CLAPET CAP	1
19	1642100200	REAR PROTECTION	1
20	1642600100	DRIVE SHAFT PROTECTION	1
21	1650013100	FRONT SMOOTH SHAFT	1
	1650012900	FRONT SPLINED SHAFT	1
22	1650022900	REAR SHAFT	1
23	1663014000	AIR INJECTION PIPE	2
24	1663065800	PIPE OIL DRIPPER-FRONT FLANGE DIRECT R	1
	1663065900	PIPE OIL DRIPPER-FRONT FLANGE DIRECT L	1
25	1663065900	PIPE OIL DRIPPER-REAR FLANGE DIRECT R	1
	1663065800	PIPE OIL DRIPPER-REAR FLANGE DIRECT L	1
26	1663066000	PIPE FRONT FLANGE-HOUSING DIRECT R	1
	1663066100	PIPE FRONT FLANGE-HOUSING DIRECT L	1
27	1663066100	PIPE REAR FLANGE-HOUSING DIRECT R	1
	1663066000	PIPE REAR FLANGE-HOUSING DIRECT L	1
28	1663066300	PIPE OIL TANK-OIL DIRECT R	1
	1663066200	PIPE OIL TANK-OIL DIRECT L	1
29	1663066400	PIPE OIL PUMP-OIL DRIPPER DIRECT R	1
	1663065600	PIPE OIL PUMP-OIL DRIPPER DIRECT L	1
30	1663066500	PIPE OIL PUMP-OIL DRIPPER DIRECT R	1
	1663065700	PIPE OIL PUMP-OIL DRIPPER DIRECT L	1
31	1672001600	SCREW TCEI M10X1,5	10
32	1673001000	OIL FILTER PLUG	1
33	1680609700	OIL PUMP GASKET	1
34	1680610200	MANIFOLD GASKET	2
35	1680707300	FRONT FLANGE GASKET	2
36	1680707800	CONVEYOR GASKET	1
37	16807011E0	CLAPET CAP GASKET	1
38	1681006600	FLANGE	2
39	1681100200	OIL DRIPPER FLANGE	1
40	1684000000	PLUG 3/8	2
41	1685002800	WASHER 30X8,5 GALV.	1
42	1685100000	ALU WASHER	2
43	1685100200	WASHER	2
44	1685100300	WASHER	2
45	1685100800	WASHER	2
46	1687509500	PUMP HOUSING PNR 142 SL	1
47	1687600000	OIL TANK	1
48	1691000000	CONVEYOR SPRING	1
49	18930008E0	CLAPET	1
50	4022200030	SEAL	1
51	4022200044	SEAL 65X45X8	1
52	4022200113	SEAL 70X55X15	2
53	4022200311	O-RING 4975	2
54	4022300001	NYLON FILTER	1
55	4022301004	SILENCER-FILTER	2
56	4023100046	BEARING 6309	2
57	4023130035	BUSCHING 55X45X22	2
58	4024251000	AUTOM. LUBRICATION PUMP CW ROTATION	1
	4024251500	AUTOM. LUBRICATION PUMP CCW ROTATION	1
59	4026101301	SCREW TE M6X10 GALV.	2
60	4026102804	SCREW TE M8X16 GALV.	3
61	4026102807	SCREW TE M8X25 GALV.	16
62	4026102808	SCREW TE M8X30 GALV.	2
63	4026102907	SCREW TE M10X25 GALV.	16
64	4026121305	SCREW TCEI M6X16 GALV.	2
65	4026121401	SCREW TCEI M8X12 GALV.	2
66	4026121407	SCREW TCEI M8X25 GALV.	8
67	4026121710	SCREW TCEI M12X35 GALV.	2
68	4026135414	SCREW M8X45 GALV.	1
69	4026135504	SCREW M10X10 GALV.	1
70	4026155605	SCREW TSPEI M6X16 GALV.	4
71	4026171211	SCREW M12X80 GALV.	2
72	4026300025	COMPENSATION RING	2
73	4026305508	NUT M12 ESAG. AUTOBLOCC.	2
74	4026308005	NUT M 8 ESAG. GALV.	2
75	4026350505	WASHER GROWER 8 GALV.	20
76	4026350508	WASHER GROWER 12 GALV.	2
77	4026351504	WASHER 6 GALV.	4
78	4026351505	WASHER 8 GALV.	8
79	4026351506	WASHER 10 GALV.	16
80	4026356002	WASHER 8X24 GALV.	3
81	4026357007	WASHER M12 GALV.	2
82	4026501006	TAB 12X8X56	1
83	4026701301	FITTING 1/2X18	2
84	4026702000	FITTING 4X1/8	8
85	4026706000	FITTING UNIV.90° 4X1/8	2
86	4026706003	FITTING UNIV.90° 6X1/8	2
87	4026706101	FITTING 4-1/8	2
88	4026904503	PLUG	1
89	4026910103	PLUG	1
90	4026910601	PLUG 1/8'	2
1		**FLANGED MANIFOLD**	
F1	1627504800	FLANGED MANIFOLD	1
F3	4026351505	WASHER M8	12
F4	4026102807	SCREW M8X25	12
F5	4026135504	SCREW M10X10	1
2		**THREADED MANIFOLD**	
F2	1627504900	THREADED MANIFOLD	1
F3	4026351505	WASHER M8	12
F4	4026102807	SCREW M8X25	12
F5	4026135504	SCREW M10X10	1

PNR 142 WITH MULTIPLIER

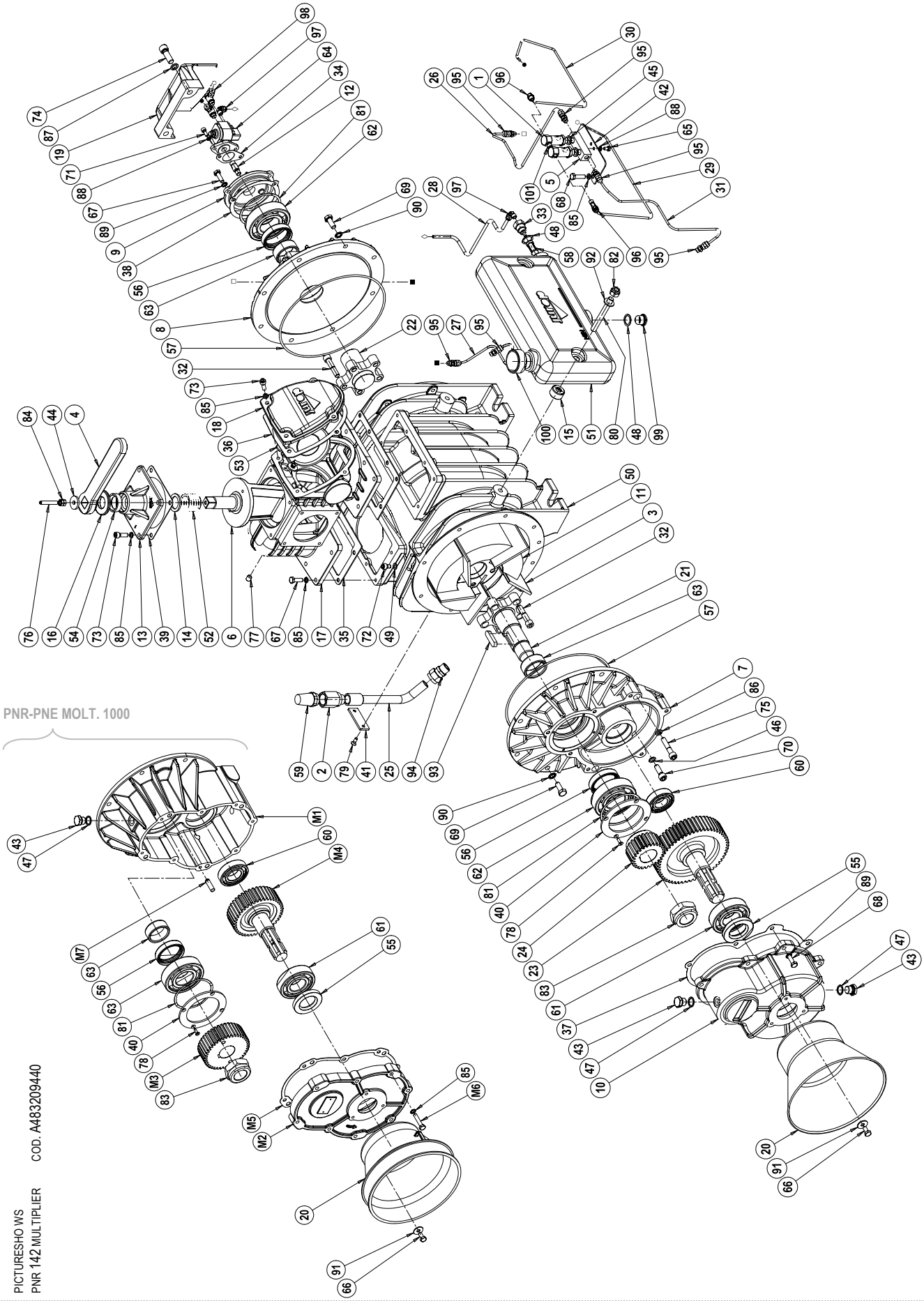

PNR 142 M

Pos.	Code	Description	Q.ty
1	1401200700	OIL DRIPPER	2
2	14933006E0	AIR INJECTION VALVE 1/2"	2
3	1601605200	VANE	5
4	1605500100	HANDLE	1
5	1608100000	DISTRIBUTOR	1
6	1608502500	CONVEYOR	1
7	1610507900	GEARBOX FLANGE	1
8	1610508100	FLANGE	1
9	1610512900	AUTOMATIC LUBRICATION PUMP FLANGE	1
10	1612503000	GEARBOX	1
11	1621503200	ROTOR	1
12	1622002600	SHAFT	1
13	1623100500	CONVEYOR CAP	1
14	162409YKB0	SPACER	1
15	1624042800	SPACER	2
16	1624202300	SPACER	1
17	16275007E0	MANIFOLD	1
18	16401008E0	CLAPET CAP	1
19	1642100200	REAR PROTECTION	1
20	1642600100	DRIVE SHAFT PROTECTION	1
21	1650012800	FRONT SHAFT	1
22	1650022900	REAR SHAFT	1
23	1651005200	GEAR	1
24	1651005300	PINION Z 25	1
25	1663014000	AIR INJECTION PIPE	1
26	1663065800	PIPE OIL DRIPPER-FRONT FLANGE GEAR. L	1
	1663065900	PIPE OIL DRIPPER-FRONT FLANGE GEAR. R	1
27	1663066000	PIPE FRONT FLANGE-HOUSING GEAR. L	1
	1663066100	PIPE FRONT FLANGE-HOUSING GEAR. R	1
28	1663066300	PIPE OIL TANK-PUMP GEARBOX LEFT	1
	1663066200	PIPE OIL TANK-PUMP GEARBOX RIGHT	1
29	1663066400	PIPE PUMP-OIL DRIPPER GEARBOX LEFT	1
	1663065600	PIPE PUMP-OIL DRIPPER GEARBOX RIGH.	1
30	1663066500	PIPE PUMP-OIL DRIPPER GEARBOX LEFT	1
	1663065700	PIPE PUMP-OIL DRIPPER GEARBOX RIGH.	1
31	1663066700	PIPE OIL DRIPPER-PUMP	1
32	1672001600	SCREW TCEI M10X1,5	10
33	1673001000	OIL FILTER PLUG	2
34	1680609700	OILP UMP GASKET	1
35	1680610200	MANIFOLD GASKET	1
36	16807011E0	CLAPETC AP GASKET	1
37	1680707200	GEARBOX FLANGE	1
38	1680707300	FRONT FALNGE GASKET	1
39	1680707800	CONVEUOR GASKET	1
40	1681006500	PLATE	1
41	1681006600	PLATE	2
42	1681100200	OILD RIPPER FLANGE	1
43	1684000000	PLUG 3/8	5
44	1685002800	WASHER 30X8,5 GALV.	1
45	1685100000	ALU WASHER	2
46	1685100100	WASHER	1
47	1685100200	WASHER	5
48	1685100300	WASHER	2
49	1685100800	WASHER	2
50	1687509500	PUMP HOUSING PNR 142 SL	1
51	1687600000	OIL TANK	1
52	1691000000	CONVEYOR SPRING	1
53	18930008E0	CLAPET	1
54	4022200030	SEAL	1
55	4022200040	SEAL 72X40X10	1
56	4022200113	SEAL 70X55X15	2
57	4022200311	O-RING 4975	2
58	4022300001	NYLON FILTER	1
59	4022301004	SILENCER-FILTER	2
60	4023100018	BEARING 6206 MULT. 540	1
	4023100020	BEARING 6206 MULT. 1000	1
61	4023100040	BEARING 6308	1
62	4023100046	BEARING 6309	2
63	4023130035	BUSHING 55X45X22	2
64	4024251000	AUTOM. LUBRICATION PUMP CW ROTATION	1
	4024251500	AUTOM. LUBRICATION PUMP CCW ROTATION	1
65	4026101301	SCREW TE M6X10 GALV.	2
66	4026102804	SCREW TE M8X16 GALV.	3
67	4026102807	SCREW TE M8X25 GALV.	13
68	4026102808	SCREW TE M8X30 GALV.	9
69	4026102907	SCREW TE M10X25 GALV.	13
70	4026120506	SCREW TCEI M10X30 GALV.	1
71	4026121305	SCREW TCEI M6X16 GALV.	2
72	4026121401	SCREW TCEI M8X12 GALV.	2
73	4026121407	SCREW TCEI M8X25 GALV.	8
74	4026121710	SCREW TCEI M12X35 GALV.	2
75	4026121813	SCREW TCEI M10X50 GALV.	2
76	4026135414	SCREW M8X45 GALV.	1
77	4026135504	SCREW M10X10 GALV.	1
78	4026155505	SCREW TSPEI M5X16 GALV.	4
79	4026155605	SCREW TSPEI M6X16 GALV.	4
80	4026171211	SCREW M12X80 GALV.	2
81	4026300025	COMPENSATION RING	2
82	4026305508	NUT M12 ESAG. AUTOBLOCC.	2
83	4026306115	NUT M36X3 ESAG. AUTOBL.	1
84	4026308005	NUT M 8 ESAG. ZINC.	2
85	4026350505	WASHER GROWER 8 GALV.	20
86	4026350506	WASHER GROWER 10 GALV.	2
87	4026350508	WASHER 12 GALV.	2
88	4026351504	WASHER 6 GALV.	4
89	4026351505	WASHER 8 GALV.	10
90	4026351506	WASHER 10 GALV.	13
91	4026356002	WASHER 8X24 GALV.	3
92	4026357007	WASHER M12 GALV.	2
93	4026501004	TAB 12X8X45	1
94	4026701301	FITTING 1/2X18	2
95	4026702000	FITTING 4X1/8	6
96	4026706000	FITTING UNIV.90° 4X1/8	2
97	4026706003	FITTING UNIV.90° 6X1/8	2
98	4026706101	FITTING 4-1/8	2
99	4026904503	PLUG	1
100	4026910103	PLUG	1
101	4026910601	PLUG 1/8'	2
		PNR WITH MULTIPLIER 1000	
M1	1610514100	GEARBOX FLANGE	1
M2	164059V5B0	FRONTC OVER	1
M3	165109KFB0	PINION 1000	1
M4	165109KGB0	GEAR	1
M5	16807BCNB0	GEARBOX GASKET	1
M6	4026102810	SCREW TE M8X40 GALV.	8
M7	4026401806	PIN 10X36	4

PNR/PNE ACCESSORIES

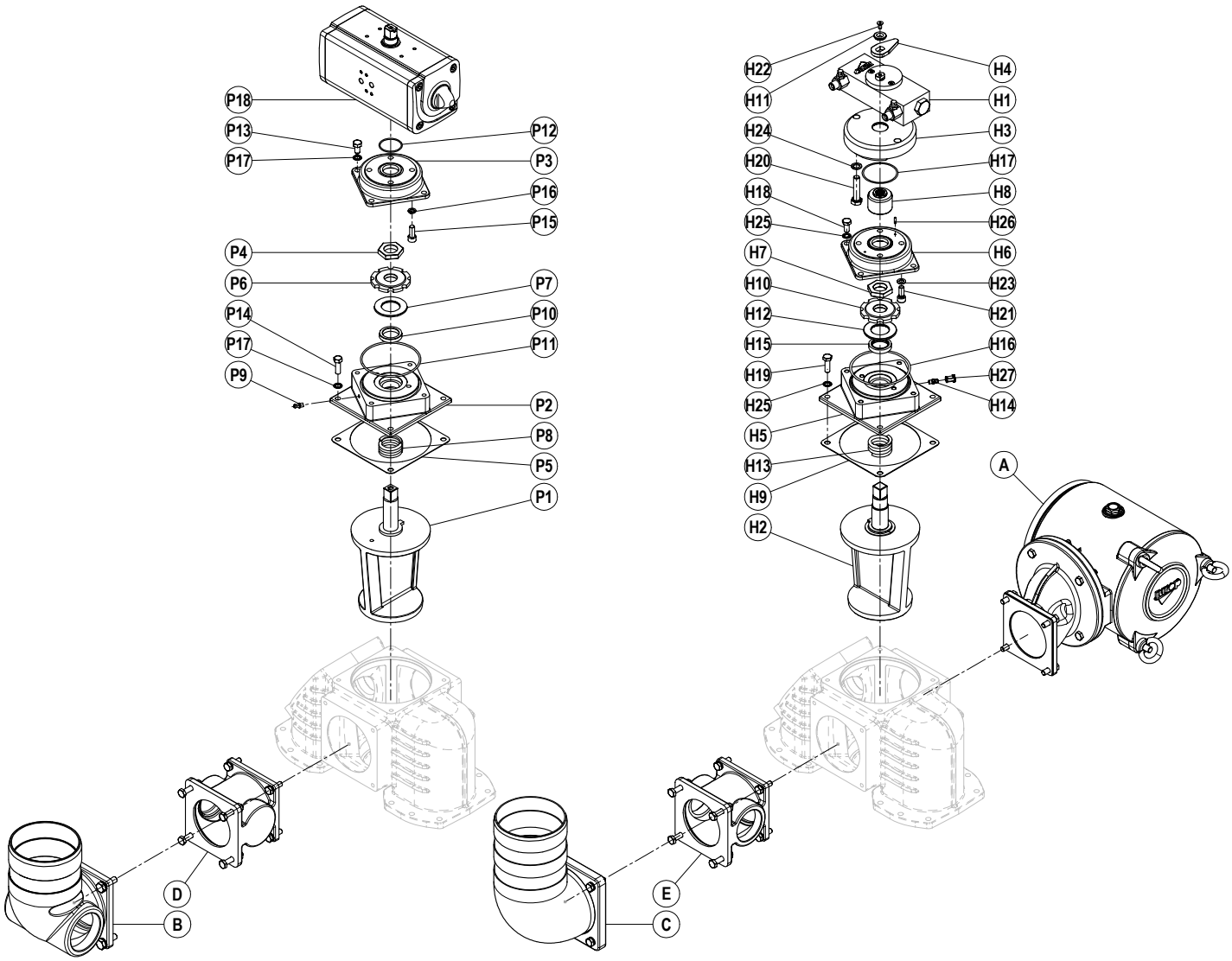

Pos.	Code	Description	Q.ty
		PNR-E 73-83	
	1430282DB0	**PNEUMATIC OPERATED 4-WAY KIT**	
P1	1608582NB0	INSIDE VALVE	1
P2	161258B4B0	SUPPORT FLANGE	1
P3	1640580QB0	COVER	1
P4	167007ZAB0	NUT	1
P5	1680700200	GASKET	1
P6	168409PQB0	WASHER	1
P7	168529TFB0	SPACER	1
P8	1691000200	SPRING	1
P9	4022100100	GREASER M6X1	1
P10	4022200005	SEAL 37X27X7	1
P11	4022200330	OR SEAL 3375	1
P12	4022200331	OR SEAL 2137	1
P13	4026102804	SCREW TE M8X16	4
P14	4026102807	SCREW TE M8X25	4
P15	4026121405	SCREW TCEI M8X20	4
P16	4026350505	WASHER GROWER 8 GALV.	4
P17	4026351505	WASHER M8	8
P18	4027100405	PNEUMATIC ACTUATOR	1
	14302033E0	**HYDRAULIC OPERATED 4-WAY KIT**	
H1	14302031E0	HYDRAULIC ACTUATOR	1
H2	160858KNB0	INSIDE VALVE	1
H3	16100416E0	HYDRAULIC ACTUATOR FLANGE	1
H4	16120286K0	PLATE	1
H5	161258B4B0	SUPPORT FLANGE	1
H6	1640580QB0	COVER	1
H7	167007ZAB0	NUT	1
H8	16732001E0	COUPLER	1
H9	1680700200	CONVEYOR-CAP GASKET	1
H10	168409PQB0	RING NUT	1
H11	16850007E0	WASHER M5	1
H12	168529TFB0	SPACER	1
H13	1691000200	SPRING	1
H14	4022100100	GREASER M6X1	1
H15	4022200005	Y-SEAL 37X27X7	1
H16	4022200330	O-RING 3375	1
H17	4022200374	O-RING 2212	1
H18	4026102804	SCREW TE M8X16 GALV.	4
H19	4026102807	SCREW TE M8X25 GALV.	4
H20	4026102911	SCREW TE M10X45 GALV.	2
H21	4026121405	SCREW TCEI M8X20 GALV.	4
H22	4026155002	SCREW INOX304 TSPEI M5X10	1
H23	4026312B01	WASHER DA 8	4
H24	4026350708	WASHER M8 GALV.	2
H25	4026351505	SCREW TE M8X25 GALV.	8
H26	4026401101	PIN 3X12	2
H27	4029602700	PROTECTION CAP	1
A	185219N7B0	SUCTION FILTER KIT	
B	1852108800	FIXED CONVEYOR Ø60	
	1852108900	FIXED CONVEYOR Ø76	
	1852108600	FIXED CONVEYOR Ø80	
C	1852109000	ADJUSTABLE CONVEYOR Ø76	
D	18521025E0	CONVEYOR WITH SAFETY VALVE CONNECTION	

Pos.	Code	Description	Q.ty
		PNR-E 104-124, PNR142	
	143028GZB0	**PNEUMATIC OPERATED 4-WAY KIT**	
P1	160858KBB0	INSIDE VALVE	1
P2	161258H0B0	SUPPORT FLANGE	1
P3	1640580QB0	COVER	1
P4	167007ZAB0	NUT	1
P5	1680707800	CONVEYOR-CAP GASKET	1
P6	168409PQB0	WASHER	1
P7	168529TFB0	SPACER	1
P8	1691000200	SPRING	1
P9	4022100100	GREASER M6X1	1
P10	4022200005	SEAL 37X27X7	1
P11	4022200330	OR SEAL 3375	1
P12	4022200331	OR SEAL 2137	1
P13	4026102804	SCREW TE M8X16	4
P14	4026102807	SCREW TE M8X25 GALV.	4
P15	4026121405	SCREW TCEI M8X20 GALV.	4
P16	4026350505	WASHER GROWER 8 GALV.	4
P17	4026351505	WASHER M8 GALV.	8
P18	4027100477	PNEUMATIC MANIFOLD	1
	14302032E0	**HYDRAULIC OPERATED 4-WAY KIT**	
H1	14302031E0	HYDRAULIC ACTUATOR	1
H2	160858KBB0	INSIDE VALVE	1
H3	16100416E0	HYDRAULIC ACTUATOR FLANGE	1
H4	16120286K0	PLATE	1
H5	161258H0B0	SUPPORT FLANGE	1
H6	1640580QB0	COVER	1
H7	167007ZAB0	NUT	1
H8	16732001E0	COUPLER	1
H9	1680707800	CONVEYOR-CAP GASKET	1
H10	168409PQB0	RING NUT	1
H11	16850007E0	WASHER M5	1
H12	168529TFB0	SPACER	1
H13	1691000200	SPRING	1
H14	4022100100	GREASER M6X1	1
H15	4022200005	Y-SEAL 37X27X7	1
H16	4022200330	O-RING 3375	1
H17	4022200374	O-RING 2212	1
H18	4026102804	SCREW TE M8X16 GALV.	4
H19	4026102807	SCREW TE M8X25 GALV.	4
H20	4026102911	SCREW TE M10X45 GALV.	2
H21	4026121405	SCREW TCEI M8X20 GALV.	4
H22	4026155002	SCREW INOX304 TSPEI M5X10	1
H23	4026312B01	WASHER DA 8	4
H24	4026350708	WASHER GROWER 10 GALV.	2
H25	4026351505	WASHER M8 GALV.	8
H26	4026401101	PIN 3X12	2
H27	4029602700	PROTECTION CAP	1
A	185212L4B0	SUCTION FILTER KIT	
B	1852103300	FIXED CONVEYOR Ø76 *	
	1852103400	FIXED CONVEYOR Ø80	
	1852103500	FIXED CONVEYOR Ø100	
C	1852103800	ADJUSTABLE CONVEYOR Ø76 *	
	1852103900	ADJUSTABLE CONVEYOR Ø80	
	1852104000	ADJUSTABLE CONVEYOR Ø100	
D	1852104200	CONVEYOR	
E	1852104100	CONVEYOR WITH SAFETY VALVE CONNECTION	
		* NO PNR 142	

PNR/PNE WITH HYDRAULIC MOTOR

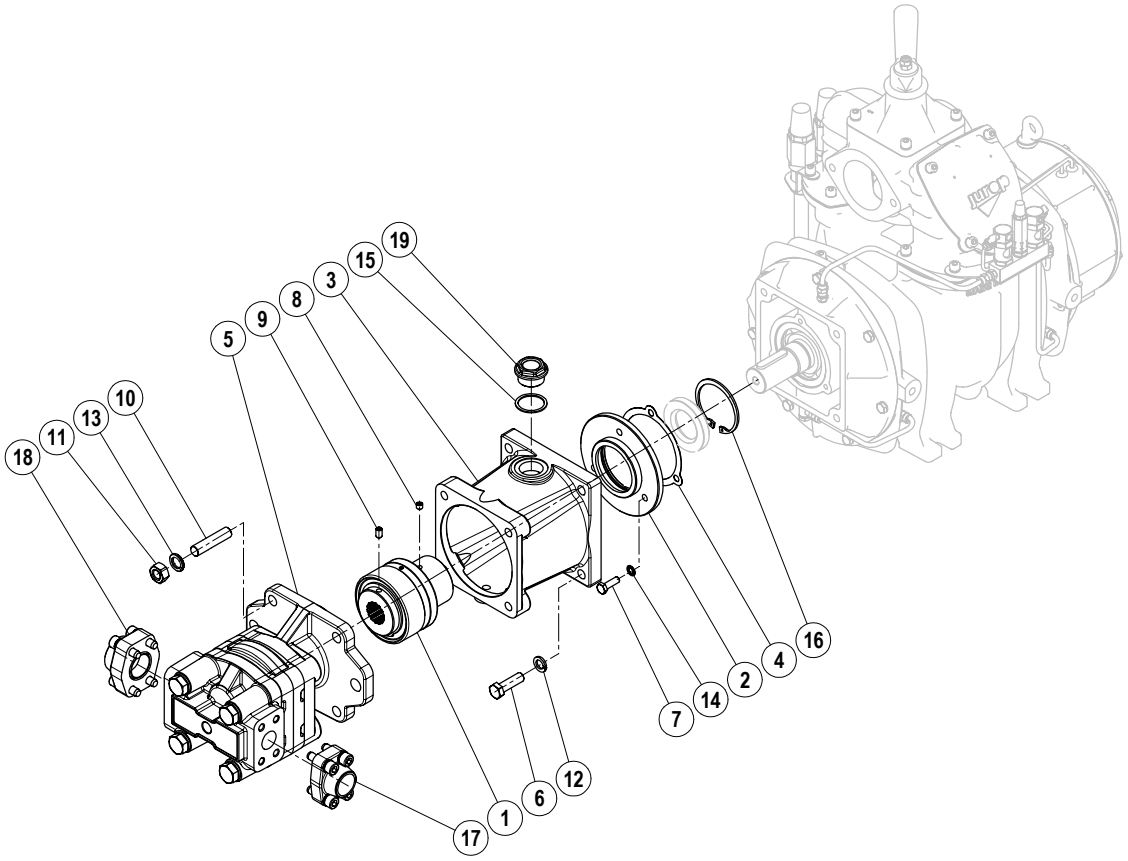

COD. E738109440

PICTURE SHOWS
PNR 73 HYD

Pos.	Code	Description	Q.ty
1	1470102900	COUPLING PNR 73-83 HYD	1
	1470102300	COUPLING PNR 104-124-142 HYD	1
2	16100396E0	FRONT FLANGE PNR 73-83	1
	1610021600	FRONT FLANGE PNR 104-124-142	1
3	1612501000	HYDRAULIC BRACKET	1
4	1680700400	FRONT FLANGE GASKET PNR 73-83	1
	1680707300	FRONT FLANGE GASKET PNR 104-142	1
5	4024107008	HYDRAULIC MOTOR PNR 73-83	1
	4024107009	HYDRAULIC MOTOR PNR 104	1
	4024107001	HYDRAULIC MOTOR PNR 124	1
	4024107004	HYDRAULIC MOTOR PNR 142	1
6	4026103004	SCREW TE M12X40 ZINC.	4
7	4026102807	SCREW TE M8X25 ZINC. PNR 73-83	3
	4026121405	SCREW TCEI M8X20 ZINC. PNR 104-…-142	3
8	4026136004	GRUB SCREW M8X10 PNR 73-83	1
	4026136003	GRUB SCREW M8X8 PNR 104-124-142	1
9	4026136006	GRUB SCREW 14.9 M8X14 ZINC.	1
10	4026171304	STUD SCREW M14X40	4
11	4026308008	NUT M14 ESAG. ZINC.	4
12	4026350709	WASHER GROWER 12 ZINC.	4
13	4026350710	WASHER GROWER 14 ZINC.	4
14	4026351505	WASHER M8 PNR 73-83	3
	4026350909	WASHER M8 PNR 104-124	3
	4026350505	WASHER GROWER M8 PNR 142	3
15	4026359001	WASHER 33,5X40X1,5 ALU.	1
16	4026510540	SEEGER I 72 PNR 73-83	1
17	4026711002	FLANGE ASF 102G 1" PNR 73-83	1
	4026711003	FLANGE ASF 104G 1"1/4 PNR 104	1

Pos.	Code	Description	Q.ty
18	4026711003	FLANGE ASF 104G 1"1/4 PNR 73-83	1
	4026711004	FLANGE AFS 106G 1"1/2 PNR 104	1
19	4026904003	PLUG 1" ZINC.	1

Model	Issue date	Revision No.	Revision date	Filled out by	Viewed by
PNR/PNE	06-06-2016	05	06-03-2023	U.T.	A.T.

Jurop SpA

Via Crosera, 50
33082 Azzano Decimo, PN (ITALY)

Tel. +39 0434 636811
Fax. +39 0434 636812

http://www.jurop.it
e-mail: info@jurop.it

Jurop SpA reserves the right to modify the products described in this manual without prior notice.